TECHNOPOOL®

TECHNOMAT PS 10 / PS 20

Flow-through chlorine electrolysis for the disinfection of water in private swimming pools up to 75 m³

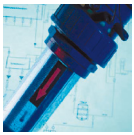

EN 02

Assembly and operating manual

▷ Read this operating manual before using the equipment.
▷ To be retained for future reference.

SALT | *Verwenden*
WATER | *Entkeimen*
LIGHT | *Schwimmen*

Content

Using this operating manual **4**

1. Basic safety instructions **5**
1.1 Marking of the safety instructions 5
1.2 Important information for safe use 6
1.3 Use in accordance with regulations 7
1.4 Unauthorised conversion 8

2. The structure of the TECHNOMAT PS **8**
2.1 Components 8
2.2 Dimensioned drawings 9
2.3 Technical data 10

3. The procedure in overview **11**
3.1 Requirements for the operation of the TECHNOMAT PS 11
3.2 From the preparations to start-up 12

4. Preparing the swimming pool water **13**
4.1 Filling the pool 13
4.2 Filling the swimming pool water with salt for the first time 13

5. Installation **15**
5.1. Installation 15
5.2 Installing the electrolytic cell in the pool 16
5.3 Installing the electrolytic cell in the circulation 17

6. Start-up **19**
6.1 “Hypochlorous acid” and “free chlorine” 19
6.2 Limit values for free chlorine in swimming pool water 19
6.3 Generating hypochlorous acid for the first time 20
6.4 Setting the chlorine content 22

7. Running operation **23**
7.1 Checking the water quality 23
7.2 Adding fresh water 23
7.3 Adding salt 24
7.4 Increasing the salt content 25
7.5 External release 25

8. Maintenance and Care **26**

9. Shutdown in winter **27**

10. Disposal **27**

11. Accessories **27**

12. Fault resolution **28**

Appendix A - Disinfection and flow-through chlorine electrolysis **29**

Appendix B - Salt water: A good feeling for your skin **31**

Appendix C - pH value and chlorine **32**

Appendix D - The pool diary **34**

Index **35**

CE Declaration of conformity **36**

Warranty claim **37**

Using this operating manual

1. This operating manual is valid for the Technopool products TECHNOMAT PS 10 and TECHNOMAT PS 20.
2. Read this operating manual carefully before using the TECHNOMAT PS for the first time.
3. Follow the instructions contained in this manual.
4. Retain this manual for later use.
5. When surrendering the TECHNOMAT PS to a third person, ensure that you also pass on the operating manual.

The instructions and useful information contained in this operating manual are marked as follows to facilitate its use.

Depiction	Meaning
▷	This symbol is followed by an instruction.
1. 2.	The numbering of instructions means that a specific sequence is to be maintained.
☞	This symbol is followed by supplementary information.

1. Basic safety instructions

These operating instructions contain information and behaviour rules for safe operation of the TECHNOMAT PS.

▷ Comply with the safety instructions.

1.1 Marking of the safety instructions

The safety instructions are separated from the text above and below them by horizontal lines and warning symbols and are marked with signal words.

The warning symbols have the following meanings:

Warns of a danger.

Warns of the danger of electric shock.

Warns of an operating fault.

Signal words indicate the severity of a danger and the risk with which the danger is associated. The signal words have the following meanings:

WARNING indicates a possibly hazardous situation, which could result in serious injury or death.

CAUTION indicates a possibly hazardous situation, which could result in slight to moderate injury.

ATTENTION indicates a situation which could lead to damage to property.

ATTENTION indicates a situation which could lead to an operating malfunction.

1.2 Important information for safe use

Comply with the safety regulations of DIN VDE 100 all the time that the TECHNOMAT PS is electrically connected. All electrical devices used in the swimming pool must be secured with a 30 mA FI circuit breaker (fault current circuit breaker).

WARNING!!
Danger of electric shock.

▷ The electrical connections should only be made by a specialist service provider.

CAUTION
A higher chlorine content in the swimming pool water can adversely affect your health, resulting in irritated skin or irritation of the mucosa.

▷ Do not use the TECHNOMAT PS in continuous operation, rather use with a conventional time switch. Comply with the technical data of the time switch in terms of the maximum current rating.
▷ Only ever operate the TECHNOMAT PS if the filter system of the swimming pool has been activated.
▷ Subject the quality of your swimming pool water to regular quality checks.

ATTENTION!
A defect on the TECHNOMAT PS resulting from too low or too high a water temperature.

▷ Only use the TECHNOMAT PS with water temperatures between 15° and 35° C.

ATTENTION!
Corrosion damage to metal parts due to salt in the swimming pool water.

▷ When converting or retrofitting your swimming pool, use only non-corroding parts
▷ Ensure that all welding seams are performed carefully and are made of non-corroding steel.
Not every stainless steel is resistant to salt water corrosion.
☞ An example for non-corroding stainless steels: 1.4529 or 1.4539.
▷ The circulation pump in the filter system must be corrosion-resistant and suitable for use in salt water.

1.3 Use in accordance with regulations

▷ The TECHNOMAT PS is only to be used
- For private swimming-pools
- With water temperatures between 15° and 35° C
- For the production of hypochlorous acid
- For stationary operation

Any other use of the TECHNOMAT PS exceeding that specified here will be classified as non-intended.

To generate the biocidal active agent “hypochlorous acid” in situ, a minimum of 1.7 kg salt (sodium chloride) must be added the bathing water as a precursor for every kilogram of chlorine to be generated. In accordance with the biocide ordinance, as of 01.09.2015, the member states of the European Union may only use precursor for biocidal active agents produced "in situ" and which are used as disinfectants. These precursors must satisfy the quality requirements made of these substances by DIN EN and be sourced from a manufacturer or supplier which is listed in accordance with article 95 of the biocide ordinance. Please ask your salt supplier to confirm conformity with the biocide ordinance (certificate).

The quantity of sodium chloride (NaCl) to be added in accordance with the biocide ordinance is calculated from the actual chlorine production, which can be determined either via the measuring and control technology (free chlorine; Y value) or the stand time of the electrodes, or using the ampere hour counter on the system. The salt can be added to the bathing water well in advance.

Biocidal active agent:
active chlorine generated from sodium chloride by electrolysis:

EC-no. mixture;
CAS no. not applicable

Precursors:

Sodium chloride:	EC-no. 231-598-3; CAS-no. 7647-14-5; Special salt for the electrolytic cell DIN EN 16401 and 14805

Operating safety is guaranteed only if the device is used for its intended purpose. All modes of operation which do not conform with this use will result in the voiding of all claims to liability against Technopool.

1.4 Unauthorised conversion

Unauthorised conversion of or alteration to the TECHNOMAT PS will lead to the loss of all warranty claims.

▷ All technical work should be performed by qualified personnel authorised by TECHNOPOOL.

2. The structure of the TECHNOMAT PS

In purchasing the TECHNOMAT PS 10 / TECHNOMAT PS 20, you have acquired a flow-through chlorine electrolysis system with which you can disinfect your swimming pool water reliably. The TECHNOMAT PS works without the otherwise usual chemicals in an economical, environmentally-friendly and easy-to-operate fashion.

2.1 Components

The TECHNOMAT PS 10 / PS 20 consists of:

Fig. 1: TECHNOMAT PS

① Control unit and
② Electrolytic cell.

2.2 Dimensioned drawings

The TECHNOMAT PS has the following dimensions and operating elements.

Control unit

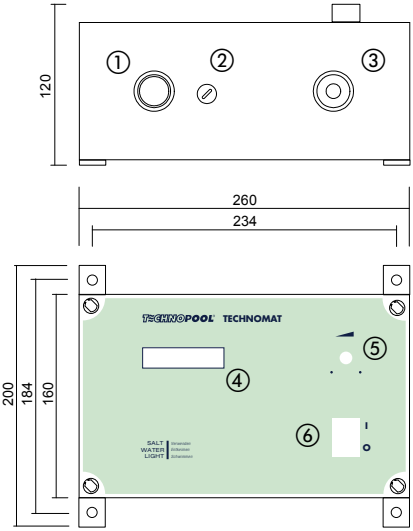

Fig. 2: Dimensioned drawing of the control unit (all dimensions in mm)

① Standard vehicle socket
② Connection to the measurement and control technology (make the contacts potential-free)
③ Voltage supply input
④ Power display, alphanumerical, voltage (U) and current (I)
⑤ Power control dial
⑥ ON/OFF switch

Electrolytic cell

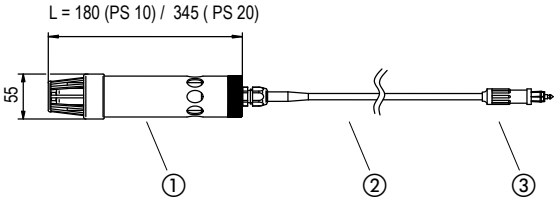

Fig. 3: Dimensioned drawing of the electrolytic cell (all dimensions in mm)

① Electrodes with cover
② Connection line
③ Standard vehicle plug

2.3 Technical data

Control unit

	TECHNOMAT PS 10 / PS 20	
Dimensions (Width x Height x Depth)	Housing without feet: 260 x 160 x 116 mm Housing with feet: 260 x 200 x 120 mm Hole dimensions: 234 x 184 mm	
Weight (without connection pipe)	3.5 kg	
Power cable	1.3 m with shock-proof plug (mains plug)	
Voltage supply	230 V AC (alternating voltage)	
Power consumption	max. 150 W	
Power display	Alphanumeric display of voltage or current	
Output electrolytic cell	0...12 V DC (direct voltage) adjustable Standard vehicle socket with cover	
Current output electrolytic cell	PS 10: max. 6 A	PS 20: max. 12 A
Housing protection class	IP 64	
release input	3.5 mm jack bush Connection to the measurement and control technology	

Electrolytic cell

	TECHNOMAT PS 10	TECHNOMAT PS 20
Disinfectant capacity	0 … 10 g chlorine equivalent	0 … 15 g chlorine equivalent
Maximum pool size	50 m³	75 m³
Temperature of the swimming pool water	15° to 35° C	
Dimensions	Length 180 mm, Ø 55 mm	Length 345 mm, Ø 55 mm
Weight (without connection pipe)	0.2 kg	0.4 kg
Power cable	10 m with standard vehicle plug	

3. The procedure in overview

3.1 Requirements for the operation of the TECHNOMAT PS

You will require the following equipment and tools to operate the TECHNOMAT PS:

- A swimming pool with a max. pool size appropriate to the equipment of the TECHNOMAT PS.
  TECHNOMAT PS 10 => pool size max. 50 m³,
  TECHNOMAT PS 20 => pool size max. 75 m³.
  ▷ Ensure that all metal components in the swimming pool and the spray water area are salt water corrosion-resistant.
- A filter system with a corrosion-resistant circulation pump which is suitable for operation in salt water.
  ▷ Ask the manufacturer of the filter system whether your circulation pump fulfils the requirements.
- Water / drinking water / tap water.
  ▷ If necessary, arrange for a hygiene institute or a stockist to check the quality of the water before using it to fill the pool.
- A 230 V AC connection.
- A time switch with which to set the runtime of the TECHNOMAT PS.
  ▷ Ensure that the maximum permissible current rating of the time switch is appropriate to the technology of the TECHNOMAT PS (max. 150 Watt).
- Measuring devices or test tablets with which you can determine the pH value and the chlorine content of the swimming pool water.
  ☞ Measuring devices and test tablets are available from your specialist stockist. Appendix C provides further information about the measurement methods.
- pH reducer or pH raiser with which to set the pH value.
  ▷ Consult your stockist.
- Salt.
  For example, you can use sea salt, rock salt or brine.
  You require 4 to 6 kg salt per m³ of swimming pool water.

3.2 From the preparations to start-up

Technopool suggests the following procedure:

1. Prepare the swimming pool water (see section 4).
   - Arrange for a water inspection
   - Fill the pool
   - Set the pH value
   - Add salt to the water
2. Set up the TECHNOMAT PS (see section 5):
   - Effect the electrical connection of the control unit
   - Suspend the electrolytic cell in the swimming pool
   - Connect the control unit and the electrolytic cell
3. Start the TECHNOMAT PS (see section 6):
   - Switch on the filter system and the control unit
   - Generate the hypochlorous acid
   - Measure the chlorine values
   - Set the ideal chlorine value.

The following figure shows how to arrange the system components.

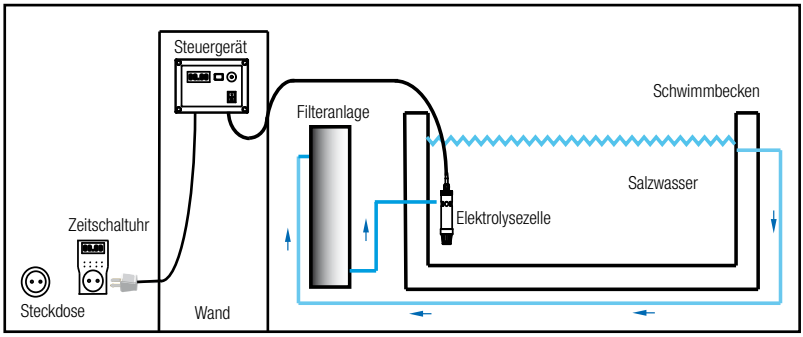

Fig. 4: System configuration

4. Preparing the swimming pool water

4.1 Filling the pool

Iron can be precipitated in the salt water and colour the water.
Phosphatic water is a good breeding ground for algae and should not be used for flow-through chlorine electrolysis.

Tap water does not usually contain any undesirable load.

Note
Load in the swimming pool water can result in undesirable side-effects.

▷ Arrange for a hygiene institute or a stockist to check the quality of the water before using it to fill the pool.

Proceed as follows when filling your swimming pool with water:

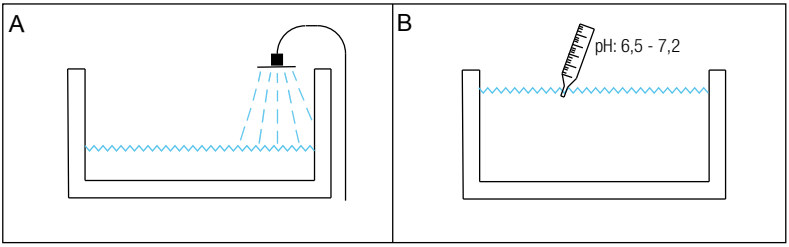

Fig. 5A-B: Filling the pool and setting the pH value.

▷ Fill your swimming pool with water (see fig. 5A).
▷ Set the pH value of the swimming pool water to a value between 6.5 and 7.2 (see fig. 5B). Setting a pH value below 6.5 or above 7.2 reduces the disinfectant capacity of the TECHNOMAT PS.
☞ Your stockist has a number of aids with which you can measure or set the pH value. Appendix C provides an overview of measuring methods.

4.2 Filling the swimming pool water with salt for the first time

Before commissioning the TECHNOMAT PS you must first add salt to the swimming pool water. The quantity of salt which you require for the swimming pool depends on the size of the swimming pool.

▷ Calculate the pool size as follows (pool dimensions in metres):
Square swimming pool => Length x width x depth
Round swimming pool => 0.79 x diameter x diameter x depth

ATTENTION!
Salt crystals can damage the filter system when it is in operation.

▷ Switch off the filter system before adding salt to the swimming pool water.

Note
Too high a salt content in the environment of the electrolytic cell will overload the control unit. The TECHNOMAT PS switches itself off.

▷ Switch on the filter system after the salt has dissolved so that the water with different salt contents can mix.

Proceed as follows when filling your swimming pool with salt:

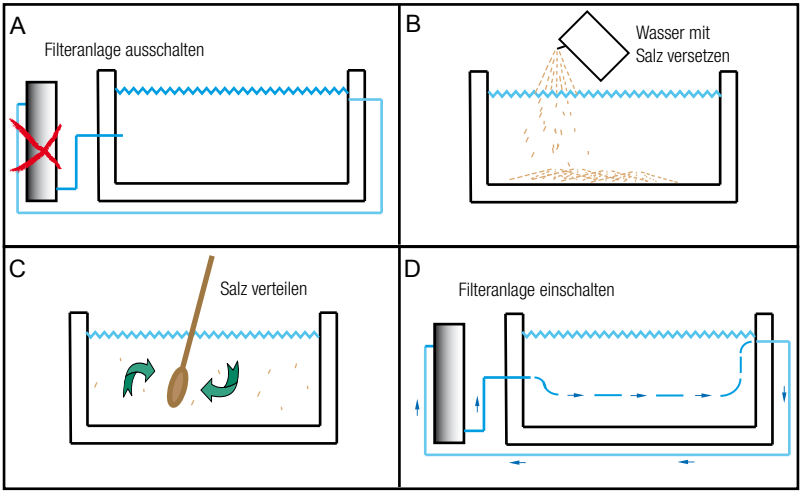

Fig. 6A-D: Adding salt to the swimming pool water

1. Switch off the filter system (see fig. 6A).
2. Add 4 to 6 kg of salt per 1 m³ water (see fig. 6B).
   This corresponds to a salt content of 0.4 to 0.6 %.
3. Distribute the salt in the pool so that it dissolves quicker (see fig. 6C).
4. Wait until the salt has dissolved.
5. Switch on the filter system (see fig. 6D) so that the water of different salt content can mix.

5. Installation

5.1. Installation

The control unit must be installed protected against spray water and rain.

WARNING!!
Danger of electric shock.

▷ The TECHNOMAT PS control unit must be installed by a specialist.
▷ Operate the control unit with 230 V AC only.
▷ Never open the control unit of your Technomat PS.

▷ The control unit should be mounted level on a stable wall in a dry location.
▷ The power supply of the TECHNOMAT is effected via a Schuko plug.

Connection with time switch

Perform the following working steps:
1. Connect the outlet socket time switch intended for the TECHNOMAT in the outlet socket.
2. Prepare the circulation pump so that it runs in settable time areas.
3. Program the outlet socket time switch of the TECHNOMAT in such a way that the operating times of the TECHNOMAT always lie within the operating times of the circulation pump.
4. Connect the TECHNOMAT Schuko plug in the outlet socket time switch.

5.2 Installing the electrolytic cell in the pool

Proceed as follows when installing the electrolytic cell:

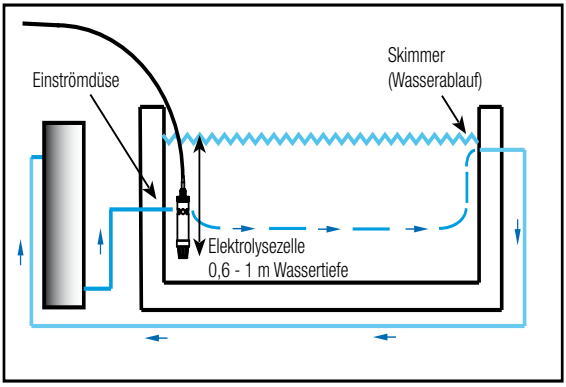

Fig. 7: Installing the electrolytic cell

1. Fasten the electrolytic cell in close proximity to the inflow nozzle and opposite the floor drain or skimmer at a water depth of c. 0.6 to 1 m (see fig. 7).
   ☞ You can also install the electrolytic cell as an “inline system” in the filter circulation. To this end, you will require the adapter for pipe installations and a PVC T-piece D63 (see section “11. Accessories” on page 27).
2. Connect the electrolytic cell standard vehicle plug in the standard vehicle socket of the control unit.

5.3 Installing the electrolytic cell in the circulation

Comply with the specifications of this section if you wish to install the electrolytic cell directly in the pool circulation.

Pre-conditions for actions:
- Installation adapter for inline fitted electrolytic cell PS10/PS20
- O-Ring for inline fitted electrolytic cell PS10/PS20
- Electrolytic cell PS10/PS20 without protective pipe
- T-piece d63/DN50 PVC
- Shut-off valve d63/DN50
- Pipe d63/DN50 PVC-U
- Pipe d63/DN50 PVC-transparent
- Angle 90° d63/DN50
- PVC cleaner, PVC adhesive and brush

Installation guidelines:
- Install the electrolytic cell in the bypass.
- The hydrogen gas produced during electrolysis may not be permitted to gather in the pipe line. The piping may not contain a slope after leaving the cell.
- The main water flow must be controllable with a shut-off valve.
- A transparent pipe must be installed in the area of the electrolysis electrodes.

Perform the following working steps:
1. Prepare the components to be adhered with the PVC cleaner.
2. Perform the adhesive installation in accordance with one of the following examples.

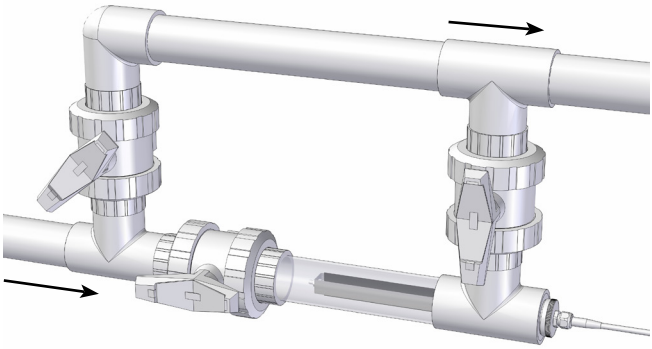

Fig. 8: Example installation version 1

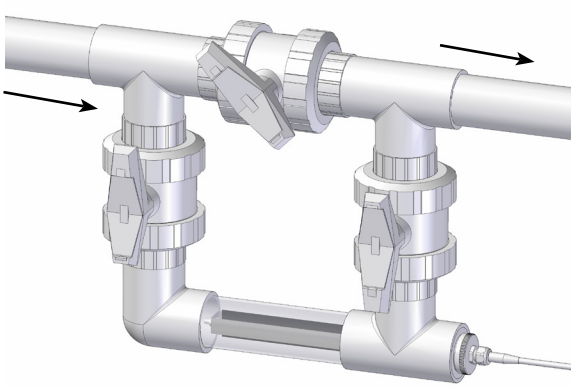

Fig. 9: Example installation version 2

3. After you have pasted the piping inc. bypass and the transparent piping, paste the installation adapter for the inline fitting in the open end. Wait until all adhesive joints have dried.
4. Insert the washer seal in the interior groove and screw the electrolytic cell carefully into the pipe to its fullest extent.

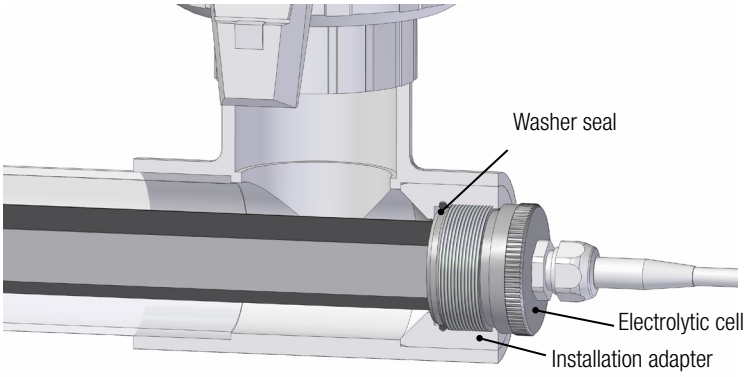

Fig. 10: Installation state of the electrolytic cell

6. Start-up

6.1 “Hypochlorous acid” and “free chlorine”

After preparing your swimming pool water and having set up your TECHNOMAT PS, you can now begin to produce “hypochlorous acid.” The more “hypochlorous acid” you produce, the better your swimming pool water will be disinfected, and the greater the disinfectant capacity. You will require a high disinfectant capacity if many bathers use your pool e.g. a pool party or a children’s birthday party.

You cannot directly determine the amount of hypochlorous acid in the water. This can only be subject to indirect influence by measuring the amount of “free chlorine”. The greater the amount of free chlorine, the greater the disinfectant capacity.

☞ You can measure the chlorine content of the swimming pool water with a “DPD-1 test tablet”, fluid reagents or an electronic measuring device. Test tablets, fluid reagents and measuring devices are all available from your specialist stockist. Further information regarding this measurement method is provided in appendix C.

6.2 Limit values for free chlorine in swimming pool water

An unspoiled swimming experience requires that you comply with the limit values for free chlorine in the swimming pool water. Failure to generate sufficient free chlorine means that your swimming pool water will not be disinfected correctly. Too much free chlorine in the water could result in skin irritation and irritation of the mucosa.

The measured values for chlorine in the water are stated in mg/l (milligrammes per litre). The lower limit value for free chlorine in your swimming pool water lies at 0.3 mg per litre. The upper limit value depends on whether your swimming pool water contains poolstabiliser (e.g. isocyanuric acid) or ”organic chlorine“ (long-term chlorine) or not:

If you have completely filled your swimming pool with fresh tap water, the upper limit value for free chlorine lies at 1.0 mg per litre.

If you have not completely changed the swimming pool water, the upper limit value lies above 1.0 mg per litre and

- the water contains neither pool stabiliser or
- organic chlorine.

▷ Arrange for a check of the amount of pool stabiliser or organic chlorine and ascertain the upper limit value.

The following table provides an overview of the limit value for chlorine.

Pool stabiliser or organic chlorine in the swimming pool water	Limit values for free chlorine in swimming pool water [mg/l]	
	Lower limit value	Upper limit value
Contained	0.3	Greater than 1.0 arrange for calculation by specialist stockist.
Not contained	0.3	1.0

6.3 Generating hypochlorous acid for the first time

Your TECHNOMAT PS works independently. Nevertheless, the flow-through chlorine electrolysis system must be subject to regular checks to ensure its optimal operation.

Comply with the specifications of this section when operating the electrolytic cell directly in the pool.

Note

A lack of control endangers the optimal operation of your TECHNOMAT PS.

- ▷ Subject the quality of your swimming pool water to hourly quality checks.
- ▷ Check the settings on the control unit every hour.
- ▷ Ensure that the filter system is switched on, when operating the TECHNOMAT PS.
- ▷ The value in the power display depends on the salt content of the swimming pool water. The greater the salt content of the swimming pool water, the greater the value on the power display.

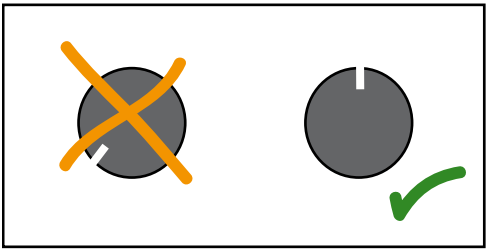

Fig. 11: Setting the power control dial

6.3.1 Start-up with the electrolytic cell in the pool

Precondition for action:

- The electrics have been installed in accordance with section “5.1. Installation” on page 15.
- The electrolytic cell is installed in accordance with section “5.2 Installing the electrolytic cell in the pool” on page 16.
- The swimming pool and the circulation are flooded with water (section “4.1 Filling the pool” on page 13).
- Salt has been added to the swimming pool water (section “4.2 Filling the swimming pool water with salt for the first time” on page 13).

- Should you wish to use the external release (section “7.5 External release” on page 25), this has already been connected.

Perform the following working steps:
1. Turn the power control dial in the central position (see fig. 11).
2. Switch on the TECHNOMAT control unit.
   The electrolytic cell now produces hypochlorous acid and bubble formation can be recognised.

The current value may not exceed 6 A (PS 10) / 12 A (PS 20). Otherwise, reduce the value with the power control dial (5).

6.3.2 Start-up with the electrolytic cell in circulation

Comply with the specifications of this section if the electrolytic cell is installed directly in the pool circulation.

Precondition for action:
- The electrics have been installed in accordance with section “5.1. Installation” on page 15.
- The electrolytic cell is installed in accordance with section “5.3 Installing the electrolytic cell in the circulation” on page 17.
- The swimming pool and the circulation are flooded with water (section “4.1 Filling the pool” on page 13).
- Salt has been added to the swimming pool water (section “4.2 Filling the swimming pool water with salt for the first time” on page 13).
- Should you wish to use the external release (section “7.5 External release” on page 25), this has already been connected.

Perform the following working steps:
1. Completely open the shut-off valve in the cell bypass in front and behind the electrolytic cell.
2. Completely open the shut-off valve of the main circulation line next to the cell bypass.
3. Switch on the pool circulation.
   The electrolytic cell is completely flooded with water (recognisable through the transparent pipe).
4. Turn the power control dial in the central position (see fig. 11).
5. Switch on the TECHNOMAT control unit.
   The electrolytic cell now produces hypochlorous acid and bubble formation can be recognised through the transparent pipe.
6. Close the shut-off valve on the main circulation line next to the cell bypass until the water flow in the bypass is sufficient to draw off the gas thus developing quickly enough. Gas must not be permitted to collect in the line. Observe this through the transparent pipe in the area of the electrolytic cell and make an adjustment if necessary.

The current value may not exceed 6 A (PS 10) / 12 A (PS 20). Otherwise, reduce the value with the power control dial (5).

6.4 Setting the chlorine content

The optimal value for the free chlorine lies between 0.3 mg per litre and the upper limit value, which is binding for your swimming pool water (see section 6.2).

CAUTION
Too much free chlorine in the swimming pool water can adversely affect your health, resulting in irritated skin or irritation of the mucosa.

▷ Do not use the TECHNOMAT PS in continuous operation, rather operate the device with a time switch. Comply with the technical data of the time switch in terms of the maximum permissible current rating (see section 2.3).
▷ Maintain the upper limit value for free chlorine in the swimming pool water.

Proceed as follows to set the chlorine content:

1. Once a chlorine content of 0.6 mg per litre has been reached, reduce the runtime of your TECHNOMAT PS via the time switch.
2. Take further measurements to observe the change of the chlorine content. To approach the best value for your swimming pool, proceed as follows:

   ▷ Should the chlorine content continue to rise, reduce the runtime.
   ▷ Should the chlorine content sink, reduce the runtime.
   ▷ Turn the power control dial a little to the right if:
   - The runtime of the TECHNOMAT PS corresponds to the runtime of the filter system and
   - The chlorine content is still too low.

   ☞ If you have the choice: Extend the runtime of the TECHNOMAT PS instead of increasing the output. A low capacity extends its service life of the electrolytic cell

7. Running operation

7.1 Checking the water quality

Changed weather conditions or the entry of soiling in the swimming pool water can result in deviation from the ideal chlorine content. The chlorine requirement also depends on the number of bathers.

▷ Once you have set the best value for your swimming pool, perform regular checks for the correct chlorine content.
This enables you to recognise deviations early.

The pool diary

A pool diary provides a good overview of the correlation between water quality and the disinfectant capacity of your TECHNOMAT PS. This diary will help with the analysis of problems. Should you e.g. be planning a pool party or a child's birthday party, the diary will help to you prepare the swimming pool water for the increased chlorine requirement.

A small table suffices as a pool diary. An example is provided in appendix D.

1. Enter the date in the table on which you performed a measurement.
2. Enter all measured values in the table. This includes the setting of the power control dial and the runtime of your TECHNOMAT PS.
3. Record the quantity of aid which you add to the swimming pool water to improve the water quality.
   ☞ Always use the same dosing container
4. Measure the water temperature, chlorine content and pH value at least once a week.
5. Measure the water hardness and its alkalinity (the acid binding capacity of the water) at the start of the swimming season or at least once a year.

7.2 Adding fresh water

An effective filter system and the flow-through chlorine electrolysis present the most important requirements for care-free swimming fun. They work to prevent illnesses spread by pathogens.

Nevertheless, these measures alone cannot prevent e.g. salts such as nitrates and sulphates from developing in the swimming pool water. We recommend that you minimise the proportion of impurities:

▷ Replace a section of your swimming pool water with fresh water at a regular interval. The quantity of water depends on the number of bathers and the amount of impurities which are transferred from the environment into the swimming pool.
  ☞ We recommend replacing a minimum of 30 litres of swimming pool water with fresh water per bather per day.
▷ If you operate a filter system with a filter backwash, follow the manufacturer's instructions for the filter system when undertaking a partial water change.

7.3 Adding salt

Adding fresh water to the swimming pool reduces the salt content of the swimming pool water. Consequence: Add salt after a partial water change.

The quantity of salt which you require depends on the quantity of fresh water which you have added to your swimming pool.

☞ You can either estimate the quantity of fresh water or measure it with a water meter. A water meter is available e.g. In a hardware store.
☞ Instead of estimating or measuring the quantity of fresh water, you can measure the salt content of the swimming pool water with a "pocket salt tester". "Pocket salt testers" are available from a specialist stockist.

Proceed as follows to add salt:

1. Switch off the filter system
2. Add 40 to 60 g salt per 10 litres of fresh water.
   This sets the salt content to the original value of 0.4 to 0.6 %.
3. Distribute the salt in the pool.
4. Wait until the salt has dissolved.
5. Switch on the filter system

7.4 Increasing the salt content

To increase the capacity of your TECHNOMAT PS you can increase the salt content in the swimming pool water up to a value of 0.7 %.

☞ With one kg salt per m³ (corresponds to 1.000 l) swimming pool water, increase the salt content by 0.1 %.

Note
Too high a salt content in the environment of the electrolytic cell will overload the control unit. The TECHNOMAT PS switches itself off.

▷ The maximum salt content may not exceed 0.7 %.
▷ To increase the salt content, proceed as in section 4.2 “Adding salt to the swimming pool water for the first time”.

7.5 External release

The TECHNOMAT PS is fitted with a connection for any measurement and control technology, e.g. the water sampling station EASYPOOL SMART 02. This permits external control of the production. This obviates the need for operation with a time switch.

Proceed as follows to prepare for external release with the EASYPOOL SMART 02:

1. Connect the EASYPOOL SMART 02 relay output with the mini stereo jack bush of the TECHNOMAT PS using a suitable cable.
2. Set the output type of the controller to “ON/OFF (relays)“.
3. Configure the parameters to be set in accordance with your requirements. Comply with the specifications of the operating manual of the controller.

Plug	Contact	Operating state
Not connected	-	Production is performed (up to 04/2015) Production is not performed (from 04/2015)
Connected	closed	Production is performed
Connected	open	No production

From 04/2015, the TECHNOMAT will be fitted with a strapping plug in external release contact.

8. Maintenance and Care

Depending on the hardness of your swimming pool water, lime scale deposits can accrete on the electrodes of the electrolytic cell. These lime scale deposits reduce the output of your TECHNOMAT PS. This means: The thicker the lime scale deposit, the lower the output of your TECHNOMAT PS.

Apart from these lime scale deposits, your TECHNOMAT PS requires no maintenance.

ATTENTION!
The incorrect lime scale remover will destroy the electrolytic cell.
Contact with hard objects can destroy the electrodes.

▷ Use only 3 to 5 % hydrochloric acid as a lime scale remover.
▷ Clean the electrode of the electrolytic cell with soft cloths.

Proceed as follows to clean the electrodes of the electrolytic cells:

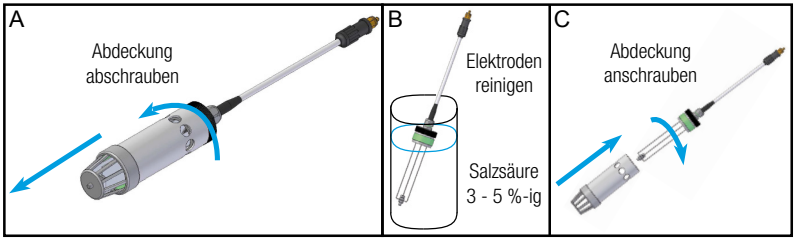

Fig. 12 A-C: Clean electrodes

1. Switch off the control unit.
2. Remove the mains plug from the outlet socket.
3. Unscrew the cover of the electrolytic cell (see fig. 12 A).
4. Remove the lime scale deposits by submerging the electrodes in the lime scale remover (see fig. 12 B).
5. Screw the cover onto the electrolytic cell (see fig. 12 C).
6. Insert the mains plug into the outlet socket.
7. Switch on the control unit.

9. Shutdown in winter

Proceed as follows to shut down your TECHNOMAT PS:

1. Remove the mains plug of the control unit from the outlet socket.
2. Remove the electrolytic cell standard vehicle plug from the output of the control unit.
3. Dismantle the electrolytic cell.
4. Dry the electrolytic cell with a soft cloth.
5. Store the control unit and the electrolytic cell dry and frost-free.

10. Disposal

- The device must be disposed of in accordance with applicable local laws and regulations. It should not be disposed of as domestic waste!
- As the disposal regulations may differ from country to country, please consult your supplier.
- In Germany, the manufacturer must provide free-of-charge disposal. provided the device has been safely returned along with a declaration of no objection (see page Page 29).

11. Accessories

	Order no.
TECHNOMAT PS 10 complete	91110000
TECHNOMAT PS 20 complete	91110001
Electrolytic cell PS 10 with 10 m connecting cableup to approx. 50 m³ pool volume	91910001
Electrolytic cell PS 20 with 10 m connecting cableup to approx. 75 m³ pool volume	91910002
TECHNOMAT PS control unit	91910000
Adapter for pipe installation inc. O-ring	91190001
PVC T-piece D63	88187
Strapping plug ø 3.5	29115

12. Fault resolution

Type of fault

The overload protection deactivates the TECHNOMAT PS. The power display is at 00.00.

Possible causes

Short circuit or overload of the control unit

- from a defect in the electrolytic cell connection line,
- resulting from excess salt in the swimming pool water.

Remedy

1. Switch the control unit on and off using the ON/OFF switch.
2. Check the connection line of the electrolytic cell for defects.
3. Check the salt content of the swimming pool water.

After replacing the defective electrolytic cell or reducing the salt content in the swimming pool water, proceed as follows:

4. Turn the power control dial on the control unit a little to the left.
   IMPORTANT! Wait at least a minute between switching the control unit off and on.
5. Switch the control unit on using the ON/OFF switch.

Appendix A - Disinfection and flow-through chlorine electrolysis

What does the disinfection of your swimming pool water achieve?

Pathogens (e.g. viruses and bacteria) can enter the swimming pool water. Organic, water-soluble and pollutants (e.g. urea, sweat and saliva) can also collect in the water. The filter system is unable to remove pathogens and organic pollutants from the swimming pool water.

Disinfectant agents kill pathogens in the swimming pool water and render pollutants harmless. This protects the health of swimmers.

What is Electrolysis?

Hypochlorous acid (HOCl) is a highly effective disinfectant. You can generate hypochlorous acid by adding chlorine products to the swimming pool water. When using the TECHNOMAT PS, you can generate HOCl via flow-through chlorine electrolysis.

Electrolysis converts electrical energy into chemical energy. To this end, two electrodes (the anode and cathode in fig 10) with electrical direct voltage are placed in water.
The direct voltage fragments certain chemical bonds such as salts into its electrically positive and negatively charged components (anions and cations).

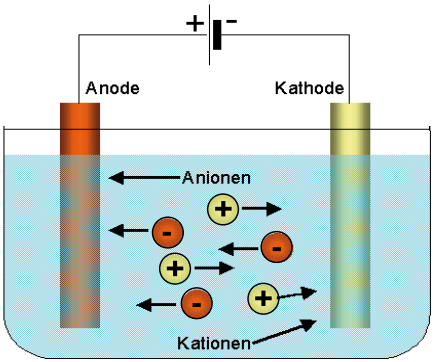

Fig. 13: Electrolysis

What happens during flow-through chlorine electrolysis?

The following figure explains the principle of flow-through chlorine electrolysis in swimming pool water.

Fig. 14: Principle of operation of the flow-through chlorine electrolysis.

① Add salt (sodium chloride = NaCl) to the swimming pool water (H_2O).
For example, you can use sea salt, rock salt or brine. The TECHNOMAT PS takes effect from a salt content of 0.4 %.
The salt dissolves.

② The electrolytic cell of your TECHNOMAT PS fragments the salt into its electrically positive and negatively charged components (sodium cations and chlorine anions).
The chlorine anions react with the water, forming the disinfectant “hypochlorous acid” (HOCl).

③ The hypochlorous acid destroys pathogens and organic pollutants, thereby disinfecting your swimming pool water.

④ Salt and water is produced during disinfection.

⑤ Salt and water are newly available for flow-through chlorine electrolysis.

Does the flow-through chlorine electrolysis run automatically?

No! Flow-through chlorine electrolysis is a circular process which you need to control in order to ensure its problem-free operation.

- You ensure the best salt content in the swimming pool water.
- You measure and set the pH value to ensure the production of the best quantity of hypochlorous acid.
- You can control the content of free chlorine in the swimming pool water. This enables you to ensure that the water is completely disinfected without impinging on your health or that of other swimmers.

The following appendix shows a range of the properties of salt water. We then give an overview of the methods with which you can measure the pH value and free chlorine content of your swimming pool.

Appendix B - Salt water: A good feeling for your skin

Salt is a natural product

...and can be found in vast quantities throughout the world. All life comes from the sea. You notice it when you sweat: The sweat on your skin has a salt content of 0.4 to 0.6 %.
The lachrymal fluid has a salt content of 0.9 %. Did you know, that embryos grow in the amniotic sac in slightly salty amniotic fluid of 0.9 %?

Salt water and its multiple effect

Swimming in salt water has a number of effects. The skin looks better, the salt withdraws water from it. Despite this it does not leach out, because the water does not simply vaporise, but rather is bonded through the salt on the skin. When drying after swimming, the swimmer massages the salt particles into the skin. This improves blood circulation. Inhaling the lightly salty air immediately over the water's surface during swimming cleans the air way.

The medical application of salt solutions.

The healing effect of salt solutions has long been known in medicine. Salt in all its forms also plays an important role in medicine today. We need consider only brine baths, brine inhalation and applications for cleaning and soothing inflamed areas of the body etc.

Salt in private swimming pools

The phenomenon in which fluids (such as drinks) present that same mineral content as bodily fluids is known as isotonicity. The infusion given in medical treatments (e.g. for blood loss) has an isotonic salt content of 0.9 %.

As far as we understand, an isotonic salt content in private swimming pools is very rare. Pool owners operate their pools regularly with a salt content of 0.4 to 0.7 %. Even a low salt content brings the full advantages of salt water. When leaving the swimming pool, water evaporation increases the salt concentration on your skin.

Salt water and flow-through chlorine electrolysis

Lightly salted swimming pool water is increasingly being disinfected via flow-through chlorine electrolysis. This method has achieved dominance in the warmer climate zones of the earth. There are over a million swimming pools in Australia Over 90 % of these pools are disinfected via flow-through chlorine electrolysis. The chlorine products used in Europe are largely unknown in large parts of Australia.

Appendix C - pH value and chlorine

What is the pH value?

The pH value indicates whether water is acidic, neutral or base (alkali). The scale of the pH values ranges from 0 to 14. Water with a pH value of 7 is neutral. The lower the pH value, the more acidic the water. The higher the pH value, the more alkali the water.

The best pH value in swimming pool water

The pH value can influence the swimming experience and disinfection effectiveness of your swimming pool water.

Neutral to weakly alkali pH values between 7.0 and 8.0 are optimal in relation to well-being. Values located outside this narrow range can cause irritation to the skin and mucous membrane, reddened eyes and even a rash.

Appendix A has established that the disinfectant effect in the swimming pool water come from the hypochlorous acid HOCl. A proportion of the hypochlorous acid splits in the swimming pool into hypochlorite (ClO^-) and hydrogen (H^+). Hypochlorite kills germs much worse than hypochlorous acid.

Higher pH values promote the formation of hypochlorite anions. This relationship is depicted in fig. 12: With a pH value of 7.0, the water contains 75 % hypochlorous acid and 25 % hypochlorite. The quantity ration is reversed with a pH value of 8.0.

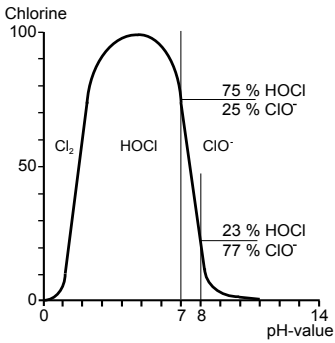

Fig. 12: Ratio between hypochlorous acid and hypochlorite

Aim for a high proportion of hypochlorous acid in the swimming pool water to ensure sufficient disinfection. We recommend setting the pH value from 6.5 to 7.2 using pH value reducers and raisers.

pH value reducers and raisers are available from specialist stockists. Let us advise you.

Combined and free chlorine in the swimming pool water.

Organic, water-soluble pollutants can develop in swimming pool water (see Appendix A). The pollutants react in a number of ways with the hypochlorous acid. A range of bonds develop including chlorine nitrogen bonds, especially chloramine. These are termed “combined chlorine”.

Combined chlorine produces the typical indoor pool smell as well as irritation of the eyes and mucosa. Combined chlorine is also found in salt water, but is subject to a considerable reduction through the use of the flow-through chlorine electrolysis. An important role in this process is played by the salt in the swimming pool water.

“Free chlorine” is made up of hypochlorous acid and hypochlorite. It has at least two positive characteristics: It decontaminates your swimming pool water and degrades combined chlorine. But remember: An unspoiled swimming experience requires that you comply with the limit values for free chlorine in the swimming pool water (see section 6.2).

Measuring methods for pH value and free chlorine

Two testing procedures have proven themselves for use in private swimming pools: the colorimetric and the photometric procedure. Both methods are easy to use and produce good results.

The colorimetric procedure involves adding a reagent to the water sample. The colour of the water sample changes. Then, compare the colour with standards on a colour wheel.

In the photometric procedure, the photometer performs a colour test. The photometric procedure provides quick and reliable measurement results.

Specialist stockists offer a number of reagents with which you can investigate your swimming pool water for its pH value and free chlorine. Here are a few examples:

- Lovibond® phenol red tablets to measure the pH value. The tablets include additional substances which equalise the influence of chlorine which could interfere with the measurement.
- You can use DPD No. 1 tablets to ascertain the content of free chlorine.
- The liquid version of Lovibond®, with which you can measure free chlorine, consists of two components which are added drop-by-drop into the water sample.

Finally, we would like to bring to your attention the Lovibond® manual “The swimming pool & Hot Whirl Pool” from Tintometer GmbH. This reference work provides comprehensive and easy-to understand information about modern treatment procedures and equipment for swimming pool water. The manual is available from your specialist stockist or in the internet (pdf download here: www.tintometer.de).

Appendix D - The pool diary

Should you wish to understand the relationship between water quality and disinfectant capacity in your TECHNOMAT PS, you should keep a pool diary. The pool diary is a table with which you document the development of the quality of your swimming pool water.

▷ Copy the following table.
▷ Enter all the measured values in the table next to their date.
▷ Note the settings on the TECHNOMAT PS and the time switch.

Date	Water temperature [°C]	free chlorine [0,3 - 1 mg/l]	pH value [6,5 - 7,2]	Addition pH [+ / -]	Power control dial [A]	Runtime TECHNOMAT [h : min]

Index

A
Add salt 24

C
Calculating the pool size 14
Chloramine 33
Chlorine 33
Chlorine content 19,22
Chlorine requirement 23
Cleaning the electrodes 26
combinded chlorine 33
Control unit 9,15
Corrosion damage 6

D
Disinfectant capacity 10,19
Disinfection 29,32
Disposal of old equipment 27

E
Electrical connections 6
Electrolysis 29
Electrolytic cell 16

F
Filter system 6,14,20
Flow-through chlorine electrolysis 30,33
free chlorine 19,33

H
Hypochlorite 32
Hypochlorous acid 19,29,32

I
Increase salt content 25
Inline system 16
Iron in the salt water 13

L
Lime scale 26
Lime scale remover 26
Limit values for chlorine 20

M
Maximum pool size 10
Measuring methods pH, chlorine 33

O
Organic chlorine 19,20
Overload of the control unit 14,28

P
Phosphatic water 13
pH value 13,32,33
pH value raiser 32
pH value reducer 32
Pool stabiliser 19,20
Power display 20

R
Release input 25

S
Safety notices 5
Saline water 31
Salt 14,31
Salt content 14,31
Short circuit 28
System configuration 12

T
TECHNOMAT runtime 22
The pool diary 23,34
Time switch 6

W
Water depth 16
Water temperature 6
Winter 27

CE Declaration of conformity

(DE) EG-Konformitätserklärung
Hiermit erklären wir, dass das nachfolgend bezeichnete Gerät aufgrund seiner Konzipierung und Bauart sowie in der von uns in Verkehr gebrachten Ausführung den einschlägigen grundlegenden Sicherheits- und Gesundheitsanforderungen der aufgeführten EG-Richtlinien entspricht. Bei einer nicht mit uns abgestimmten Änderung am Gerät verliert diese Erklärung ihre Gültigkeit.

(EN) EC Declaration of Conformity
We hereby certify that the device described in the following complies with the relevant fundamental safety and sanitary requirements and the listed EC regulations due to the concept and design of the version sold by us.
If the device is modified without our consent, this declaration loses its validity.

(FR) Déclaration de conformité CE
Nous déclarons sous notre propre responsabilité que le produit ci-dessous mentionné répond aux exigences essentielles de sécurité et de santé des directives CE énumérées aussi bien sur le plan de sa conception et de son type de construction que du modèle que nous avons mis en circulation.
Cette déclaration perdra sa validité en cas d'une modification effectuée sur le produit sans notre accord explicite.

(ES) Declaración de conformidad CE
Por la presente declaramos que, dados la concepción y los aspectos constructivos del modelo puesto por nosotros en circulación, el aparato mencionado a continuación cumple con los requisitos sanitarios y de seguridad vigentes de las directivas de la U.E. citadas a continuación.
Esta declaración será invalidad por cambios en el aparato realizados sin nuestro consentimiento.

(NL) EU-overeenstemmingsverklaring
Ondergetekende Lutz-Jesco GmbH, bevestigt, dat het volgende genoemde apparaat in de door ons in de handel gebrachte uitvoering voldoet aan de eis van, en in overeenstemming is met de EU-richtlijnen, de EU-veiligheidsstandaard en de voor het product specifieke standaard. Bij een niet met ons afgestemde verandering aan het apparaat verliest deze verklaring haar geldigheid.

(PT) Declaração de conformidade CE
Declaramos pelo presente documento que o equipamento a seguir descrito, devido à sua concepção e ao tipo de construção daí resultante, bem como a versão por nós lançada no mercado, cumpre as exigências básicas aplicáveis de segurança e de saúde das directivas CE indicadas.
A presente declaração perde a sua validade em caso de alteração ao equipamento não autorizada por nós.

Bezeichnung des Gerätes / description of the unit:	Technomat
Angewendete harmonisierte Normen / applied harmonized rules:	EN60529 (Schutzart / protection IP64) EN61000-3-2 (EMV) EN61000-3-3 (EMV) EN61000-4-2 (EMV) EN61000-4-3 (EMV) EN61000-4-4 (EMV) EN61140 (SELV) Richtlinie / directive 2011/65/EU (RoHS)

Dokumentationsbevollmächtigter:
Authorized person for documentation: Lutz-Jesco GmbH

Heinz Lutz
Geschäftsführer / Chief Executive Officer
Lutz-Jesco GmbH
Wedemark, 01.03.2014

Lutz-Jesco GmbH
Am Bostelberge 19
30900 Wedemark
Germany

Warranty claim

Please copy and enclose with the unit.
If the unit breaks down within the warranty period, please return it in a clean conditions with the warranty application duly completed.

Sender

Name:.....
Address:.....
.....
.....
.....
Date:..... .....
Telephone:.....

The device

Date of purchase:.....
Device type:.....
Serial number:.....

Fault details:.....
.....
.....
.....

Type of fault:

1. Mechanical fault.....
   Premature wear.....
   Wearing parts.....
   Breakage/other damage.....
   Corrosion.....
   Damage in transit.....
2. Electrical fault.....
   Loose connections such as connectors or cables.....
   Controls (e.g. switches / buttons).....
   Electronics.....

Further details

Application site / site description:.....
Accessories used (e.g. extension cable, time switch etc.):.....
.....
Commissioning (date):.....
Running time (approx. operating hours):.....

Please describe the specific installation and enclose a basic sketch of the chemical feed system, showing materials of construction, diameters, lengths and heights of suction and discharge lines.