EASYCHLORGEN T

Product information

Sodium hypochlorite systems

Water disinfection with sodium hypochlorite (NaClO)
Water is a precious commodity worldwide and is needed for many applications. Whether it is drinking water, industrial water, swimming pool water or process water – by disinfecting with the EASYCHLORGEN T, you can guarantee safe use.

Safe generation of sodium hypochlorite
EASYCHLORGEN T sodium hypochlorite systems produce sodium hypochlorite from brine and water. The generated product has a concentration of approx. 0.5 – 0.7 %. This sodium hypochlorite solution is very low in minerals. This eliminates the extensive cleaning and descaling of the injection nozzles.

Conventional sodium hypochlorite losses up to 20 % of the active chlorine it contains within a few days during storage. The sodium hypochlorite generated by EASYCHLORGEN T does not require any additives to stabilise it; its chlorine content remains stable for months.

Production and storage of sodium hypochlorite from a brine solution in close proximity to the process eliminates the need to transport and store chemicals. This rules out the risk of accidental leakage and contact between sodium hypochlorite and personnel. No chemicals need to be transported, only salt. Safe operation is rounded off by monitoring of the ambient air using a hydrogen detector. A single EASYCHLORGEN T system fitted with a standard product tank can supply several dosing pumps with sodium hypochlorite for disinfection.

Functions
- Chlorine capacities of 250, 500, 1000 and 2000 g/h available
- Colour LED operating status display
- Alarm logs with recording
- Exclusive use of salt as a starting chemical
- On-site generation and intermediate storage of the sodium hypochlorite
- Safe and sealed electrolysis process
- Considerable health & safety benefit to operators
- Integrated touchscreen control
- Select from a wide range of menu languages
- Intuitive and simple operation
- Supports the communication protocols Modbus TCP, EtherNet/IP, e-mail, VNC and SMS as standard; optionally also Modbus RTU via RS485
- Forwarding of alarm messages via relay contact
- No exhaust gases as with conventional sodium hypochlorite solutions in dosing pumps
- Eliminate injection point scaling associated with commercial sodium and calcium hypochlorites
- Simple maintenance and longer maintenance intervals
- Modular construction
- Various product tank sizes and salt dissolving tanks can be connected to the skid system

safety is our concern

General

Easy handling
The operator need only fill the salt dissolving container with salt. From the resulting saturated brine, EASYCHLORGEN T generates a diluted brine solution that is optimally adapted to electrolysis. The diluted brine is fed into the electrolytic cell, where electrical energy is applied to produce sodium hypochlorite. This procedure is repeated until the supply tank has been filled. Lutz-Jesco GmbH provides a wide range of dosing pumps and accessories as well as complete dosing solutions to transport the sodium hypochlorite safely to the process.

In continuous operation, the EASYCHLORGEN T can detect irregularities in its process. Instead of stopping hypochlorite production immediately, the system automatically adjusts itself and continues to operate whilst the corresponding warning is displayed. The warnings are displayed in a comprehensible fashion, so that the operator can easily identify and remedy problems without interrupting operation. This avoids unnecessary and costly shutdowns.
A major advantage of EASYCHLORGEN T over competitor systems is its compact design. There is often very little space available particularly in basements near the building water connection.

Another advantage is its vacuum dosing technology. The number of wearing parts has been reduced to a minimum. This enables a long service life and low-cost operation with comparatively long maintenance intervals.

Thanks to the modular design and a chlorine output of up to 2 kg of sodium hypochlorite per hour, even larger processes or several swimming pools can be supplied with chlorine at the same time with just one system.

Application areas

- Chlorination in waterworks
- Food washing / processing treatment
- Dairies / Breweries cleaning in place (CIP)
- Cooling tower biocide treatment
- Industrial process and wastewater treatment
- Swimming & Spa pool disinfection

Technical data

EASYCHLORGEN T		250	500	1000	2000
Chlorine performance	g/h	250	500	1000	2000
Chlorine concentration	g/l	6 ± 1			
Energy consumption	kWh	1 -1.25	2 -2.5	4 – 5	8 -10
Power supply		110 or 230 V~		230 V~ / 400 V 3N~ or 208 V 3N~	400 V 3N~ or 208 V 3N~
Frequency	Hz	50 – 60			
Operating pressure	bar	2 – 5			
Nominal water consumption	l/h	42	83	167	333
Nominal salt consumption	kg/h	0.8 – 0.9	1.5 – 1.8	3 – 3.5	6 – 7
Protection class		IP54			
Permissible ambient temperature	°C	5 – 40			
Permissible feed water temperature	°C	8 – 23 (power output is automatically reduced above 23 °C)			

Biocide Ordinance
The EASYCHLORGEN T is a system for the "in situ" production of the biocide active agent "active chlorine produced from sodium chloride via electrolysis". In accordance with the biocide ordinance, as of 01/09/2015, the member states of the European Union may only use precursors for biocidal active agents produced "in situ" and which are used as disinfectants. These precursors must satisfy the quality requirements made of these substances by DIN EN and be sourced from a manufacturer or supplier listed in accordance with article 95 of the biocide ordinance. Please ask your supplier to confirm conformity with the biocide ordinance (certificate).

Biocidal active agent:

active chlorine generated from sodium chloride by electrolysis	EC No. mixture; CAS no. not applicable

Precursors:

Sodium chloride	ECNo. 231-598-3; CAS no. 7647-14-5; Special salt for electrolytic cells DIN EN 16401 and 14805

Product description

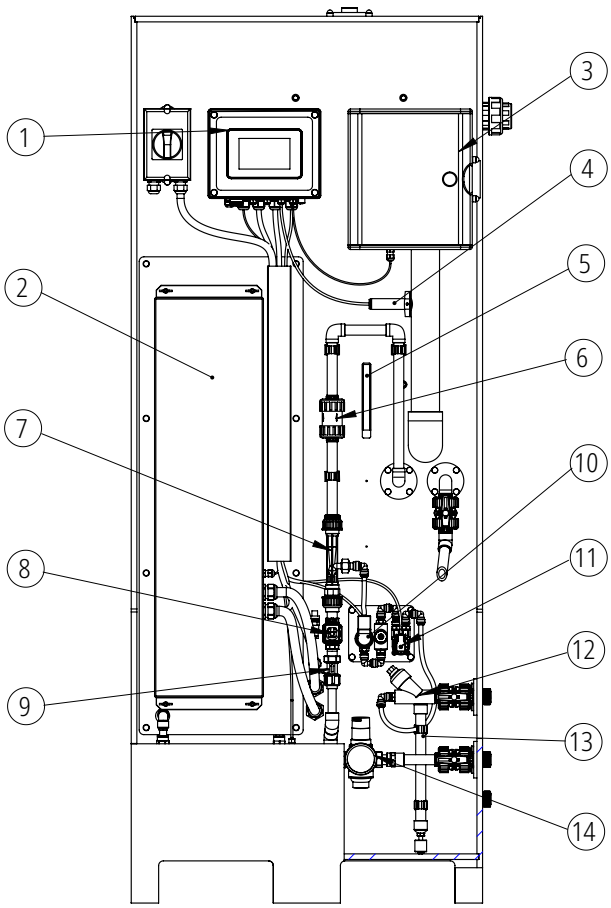

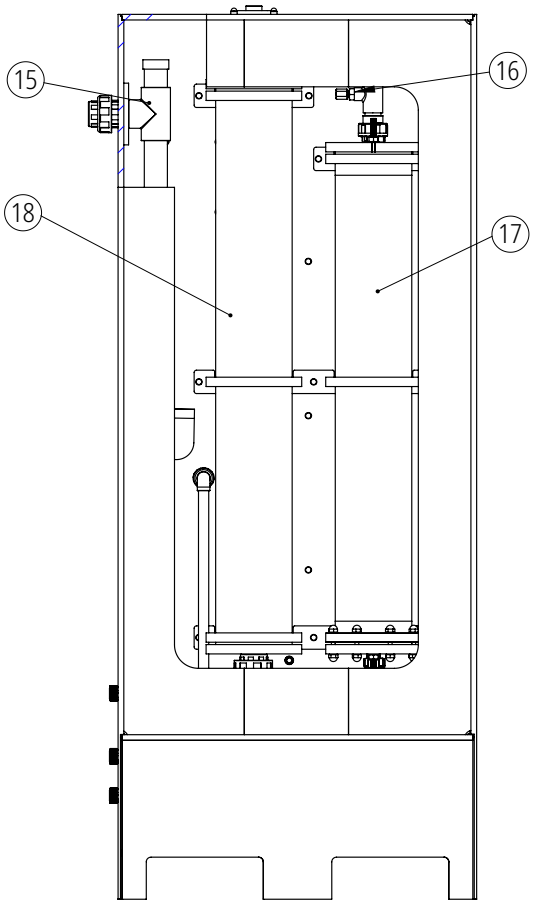

No.	EASYCHLORGEN T
1	Touch display
2	Power supply unit (PSU)
3	Air blower
4	Air flow sensor
5	LED status display
6	Non-return valve (water)
7	Brine injector
8	Solenoid valve (water)
9	Water flow meter

No.	EASYCHLORGEN T
10	Solenoid valve (brine)
11	Flow meter (brine)
12	Y-strainer
13	Float switches
14	Pressure-reducing valve (PRV)
15	Product outlet level switch
16	Product temperature sensor
17	Electrolytic cell
18	H_2 degassing column

Dimensions

All dimensions in mm

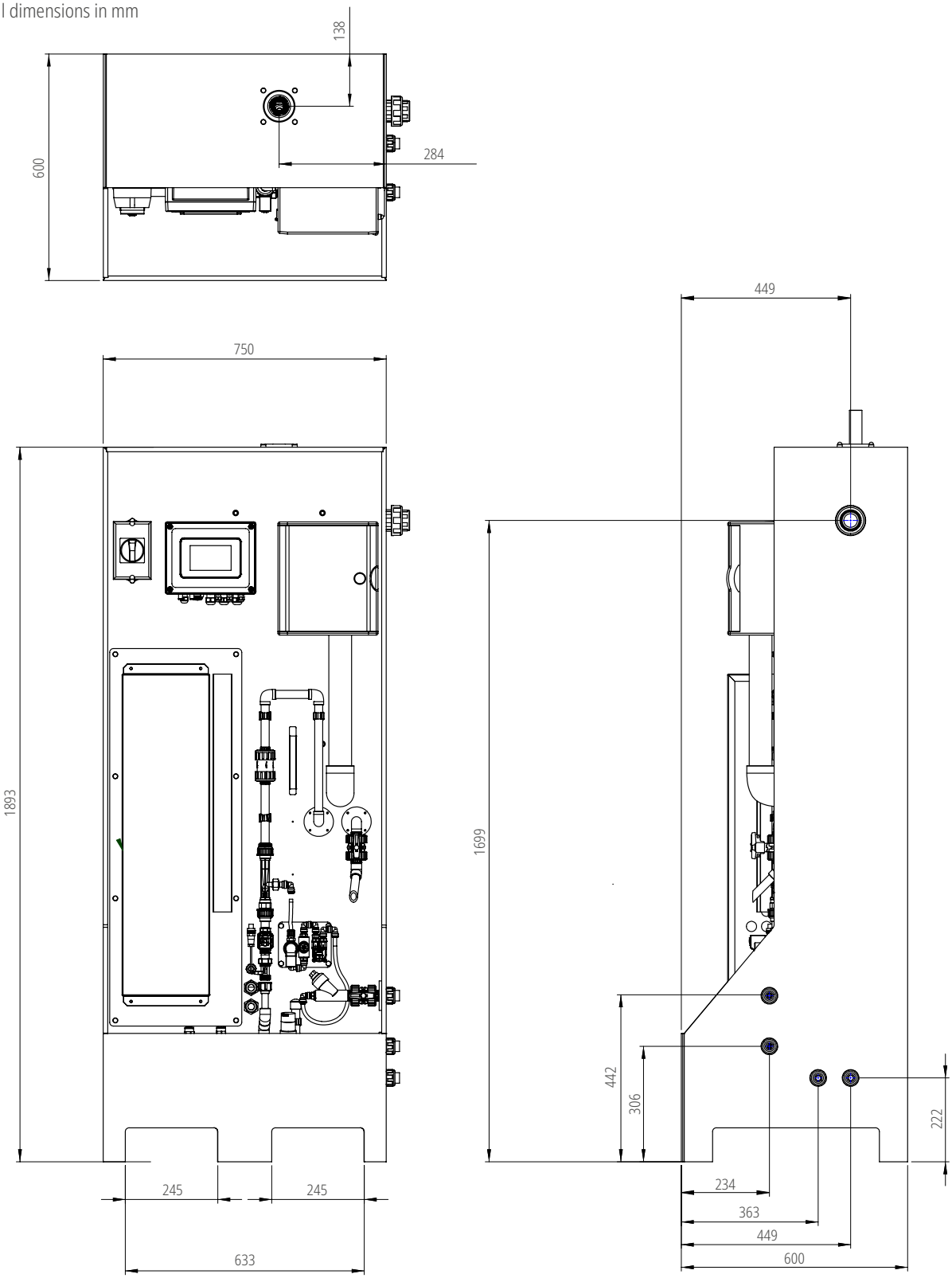

Standard accessories

- Water Softener
- Level switch
- Brine and product tanks
- Modbus interface module

Lutz-Jesco GmbH
Am Bostelberge 19 | D-30900 Wedemark | Telephone +49 5130 5802-0 |info@lutz-jesco.com | www.lutz-jesco.com

Order no. PI-65001EN | State of the art 10.2024 | Subject to technical changes

Follow us: