en

Original operating instructions
Injection nozzles

Injection nozzle R
Injection nozzle S
Injection nozzle SAH
Injection nozzle SKD

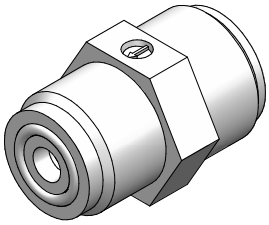

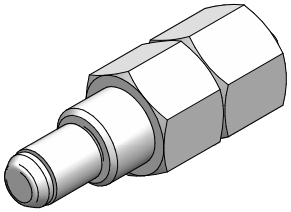

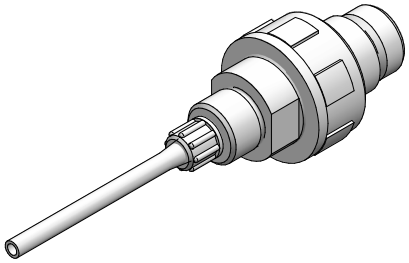

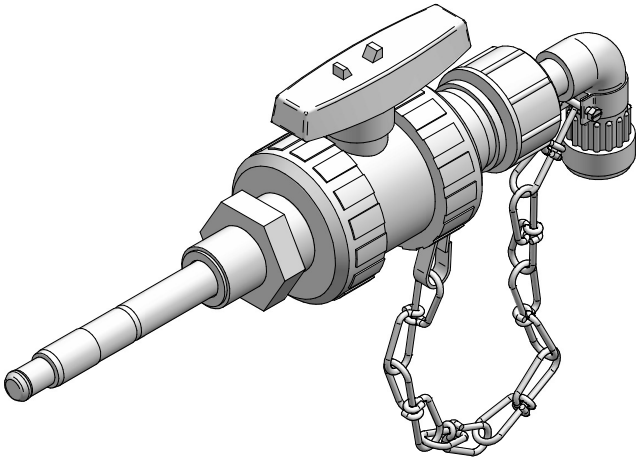

BA-12303-01-EN / 1 / 19/08/2025

Please read this manual before starting up!

To be retained for future reference.

Table of contents

1 About these operating instructions 4

1.1 Target groups 4

1.2 General non-discrimination 4

1.3 Warnings 4

1.4 Action steps 4

1.5 Cross-references 5

1.6 Latest version 5

1.7 Copyright 5

2 Safety 6

2.1 General warnings 6

2.2 Hazards due to non-compliance with the safety instructions 6

2.3 Working in a safety-conscious manner 6

2.4 Personal protective equipment 6

2.5 Personnel qualification 6

2.5.1 Personnel tasks 7

3 Intended use 8

4 Product description 9

5 Technical data 10

6 Dimensions 11

6.1 Hose injection nozzles 11

6.1.1 Type S with integrated connection 11

6.1.2 Type S with separate connection 11

6.1.3 Type SKD 11

6.1.4 Type SAH 11

6.2 Injection nozzles with non-return valve 12

6.2.1 Type R 12

7 Installation 13

7.1 Hose injection nozzles 13

7.1.1 Injection nozzle S 13

7.1.2 Injection nozzle SAH 13

7.1.3 Injection nozzle SKD 13

7.2 Injection nozzles with non-return valve 14

7.2.1 Injection nozzle R 14

8 Commissioning 15

9 Transport, storage and disposal 16

10 Accessories 17

11 Maintenance 18

11.1 Maintenance intervals 18

11.2 Maintenance work 18

11.2.1 Dismantling the injection nozzle SAH for maintenance 18

12 Decontamination declaration 19

13 Warranty claim 20

BA-12303-01-EN / 1 / 19/08/2025

1 About these operating instructions

This document:

- Is part of the product.
- Describes the safe and correct use of the product in all operating phases.
- Must be read completely before the product is commissioned.
- Must be read and applied by every person tasked with working on the product.
- Must be kept for the duration of the service life of the product.
- Must be passed on to any subsequent owner of the product.

1.1 Target groups

Target group	Task
Operator	1. Keep these operating instructions available at the place of use of the product, including for later use. 2. Instruct employees to read and comply with these instructions, especially the safety instructions and warnings. 3. Comply with additional system-related specifications and regulations.
Qualified personnel Trained persons	▶ Read, observe and follow these operating instructions, in particular the safety instructions and warnings.

Table 1: Target groups and their tasks

1.2 General non-discrimination

For better readability, these operating instructions always use the masculine form when referring to persons. However, all genders are addressed equally.

1.3 Warnings

Warnings are intended to help you recognise risks and avoid negative consequences. They are structured as follows in these operating instructions:

Warning sign **SIGNAL WORD**

Type and source of danger

Consequences of non-compliance

▶ A safety precaution to be taken to eliminate the hazard.

Fig. 1: Design of warnings

Signal words

These operating instructions use the following signal words to emphasise the severity of possible injuries if the danger is ignored:

DANGER

Imminent danger

Non-compliance can result in death or serious injury.

WARNING

Possible danger

Non-compliance can lead to death or severe injuries.

CAUTION

Potentially hazardous situation

Non-compliance can result in minor injuries.

NOTE

Potentially hazardous situation

Non-compliance can result in damage to property or malfunctions.

INFORMATION

Information or recommendation

Simplifies handling or extends the service life of the product or system.

Warning signs used

These operating instructions use the following warning signs to indicate the type and source of danger:

Danger from corrosive substances

Danger from corrosive substances

Risk of machine damage or malfunction

1.4 Action steps

Action steps are structured as follows:

✓ This prerequisite must be met before you can start with the action steps.

▶ Single step

Multiple steps in sequence are structured as follows:

1. First step
2. Second step

↳ Intermediate result of a step

⚐ Overall result

1.5 Cross-references

Cross-references are marked with an arrow.

Example: (→ Fig. 5)

1.6 Latest version

The current version of these operating instructions can be found on the manufacturer's website.

1.7 Copyright

The content of these operating instructions and the images contained in them are subject to the copyright protection of the manufacturer.

2 Safety

2.1 General warnings

WARNING

Chemical burns or other burns through dosing medium

You may come into contact with dosing equipment when working on the product.

- ▶ Wear appropriate personal protective equipment, especially for the protection of eyes and skin.
- ▶ Avoid skin contact with the dosing medium.
- ▶ Check that all the screw connections have been tightened correctly and are leak-proof.
- ▶ Never look into open ends of plugged hoses and valves.

2.2 Hazards due to non-compliance with the safety instructions

Failure to follow the safety instructions may endanger not only persons, but also the environment and the equipment.

The specific consequences can be:

- Failure of important functions of the product and the associated system
- Failure of required maintenance and repair methods
- Risk to persons when working on the product

2.3 Working in a safety-conscious manner

Besides the safety instructions specified in these operating instructions, further safety rules may apply. Always comply with all safety-relevant regulations and guidelines that apply at the usage location of the product. Note in particular the following items:

- Safety regulations on handling electricity and live components
- Safety regulations on handling hazardous substances
- Accident prevention regulations
- Safety and operating provisions
- Environmental protection provisions
- Other applicable directives and laws

2.4 Personal protective equipment

Based on the degree of risk and the type of work you are carrying out, you must use corresponding personal protective equipment. Read the Accident Prevention Regulations and the Safety Data Sheets for the dosing media to find out what protective equipment you need.

The following protective equipment is recommended as a minimum:

Eye protection

Protective clothing

Protective gloves

Table 2: Protective equipment required

Wear the protective equipment when performing the following tasks:

- Installation
- Operation

2.5 Personnel qualification

Any personnel who work on the product must have special knowledge and skills.

Anybody who works with the product must meet the conditions below:

- Attendance at all the training courses offered by the owner
- Personal suitability for the respective activity
- Sufficient qualification for the respective activity
- Training into the handling of the device
- Knowledge of safety equipment and the way this equipment functions
- Knowledge of these operating instructions, particularly the safety instructions and sections relevant for the activity
- Knowledge of fundamental regulations regarding health and safety and accident prevention

All persons must have one of the following minimum qualifications:

- Trained as a specialist to work independently with the product
- Sufficient training to work on the product under the supervision and guidance of a qualified specialist

These operating instructions differentiate between the following user groups:

Qualified personnel

Thanks to their professional training, knowledge, experience and knowledge of the relevant specifications, qualified personnel are able to perform the job allocated to them and recognise and/or eliminate any possible dangers by themselves.

Trained electricians

Due to their professional training, knowledge and experience as well as knowledge of specific standards and provisions, trained electricians are able to do the electrical work assigned to them and to recognise and avoid any potential dangers by themselves.

They are specially trained for their specific working environment and are familiar with relevant standards and provisions.

They must comply with the legally binding regulations on accident prevention.

Trained persons

Trained persons have received training from the operator about the tasks they are to perform and about the dangers stemming from improper behaviour.

Trained persons have attended all trainings offered by the operator.

2.5.1 Personnel tasks

Incorrect handling of the product can cause severe personal injury and damage to property. Therefore, ensure that all work is carried out by qualified personnel only.

The following table shows which qualifications are required for the corresponding activities.

Qualification	Activities
Qualified personnel	• Hydraulic installation • Commissioning • Shut-down • Troubleshooting • Maintenance • Disposal
Trained electricians	• Electrical installation • Elimination of electrical faults
Trained persons	• Operation • Storage • Transportation

Table 3: Personnel tasks

3 Intended use

Injection nozzles are only to be used with fluid dosing media.

Injection nozzles are only to be used following their correct installation and in accordance with the technical data and other specifications of the operating instructions.

Comply with the general restrictions in terms of the viscosity thresholds, chemical resistance and density.

For further information, consult the resistance list of the manufacturer.

WARNING

Unsuitable dosing media!

Never use unsuitable dosing media such as flammable or radioactive media. The materials of the injection nozzles are not designed for such dosing media; use in this context can result in leaks which can cause serious injury and damage to machines.

- ▶ Wear appropriate personal protective equipment, especially for the protection of eyes and skin.

4 Product description

The injection nozzle is a fitting with which the dosing medium is introduced into a pressurised system.

Depending on the version, either a non-return valve with a spring-loaded ball (type R) or a valve hose (type S) ensures that no process medium can flow backwards to the dosing pump during normal dosing operation and process-related downtimes.

Injection nozzles should be fitted with a shutoff valve wherever possible. This means that the dosing system (inc. non-return valve) can be separated from the pressurised system (e.g. for maintenance). The shutoff valve can be closed during longer downtimes, as the leak-free status of the non-return valve can be compromised through impurities or wear.

The most important factor in choosing the corresponding injection nozzle is the flow volume of the dosing medium, the chemical resistance, the temperature-resistance and the non-return function.

5 Technical data

General

Information		Value				
Material		PVC / PVDF / PP / stainless steel / brass				
Nominal widths and flow*		DN4 up to 70 l/h	DN6 up to 150 l/h	DN10 up to 400 l/h	DN15 up to 900 l/h	DN25 up to 2600 l/h
Max. ambient temperature		5 – 45° C (with PVC parts 5 – 40 °C)				
Max. temperature of the medium	PVC	35 °C				
	PVDF	60 °C				
	PP	60 °C				
	Stainless steel	80 °C				
	Brass	80 °C				

Table 4: General

* Flow control for uniform flow. If a pulsation damper is not used, the maximum flow with motor pumps amounts to 1/3 and with solenoid pumps, 1/10 of the stated value.

Hose injection nozzles

Information		Value		
		Type S	Type SKD	Type SAH
Opening pressure		0.5 or 1.1 bar	0.2 or 1.1 bar	0.5 or 1.1 bar
Nominal width		DN4		
Nominal pressure		PN10, PN16	PN16	PN10
Screw-in thread		G1/4, G1/2 male	G1/2 male	
Material	Housing	PVC, stainless steel, brass	PVC, PVDF	PVC
	Seal/valve hose	FPM, EPDM		

Table 5: Technical data (hose injection nozzles)

Injection nozzles with non-return valve

Information		Value
		Type R
Opening pressure		0.1 or 1.2 bar
Nominal width		DN4, DN6, DN10, DN15, DN25
Nominal pressure	DN4	PN16
	DN6 – DN25	PN10
Screw-in thread	DN4	G1/2 male
	DN6	G3/4 male
	DN10	G1 1/4 male
	DN15	G1 male
	DN25	G1 1/2 male
Material	Housing	PVC, PP, PVDF, stainless steel
	Seal	FPM, EPDM, PTFE
	Spring	Hastelloy C4

Table 6: Technical data (injection nozzles with non-return valve)

6 Dimensions

All dimensions in millimetres (mm).

6.1 Hose injection nozzles

6.1.1 Type S with integrated connection

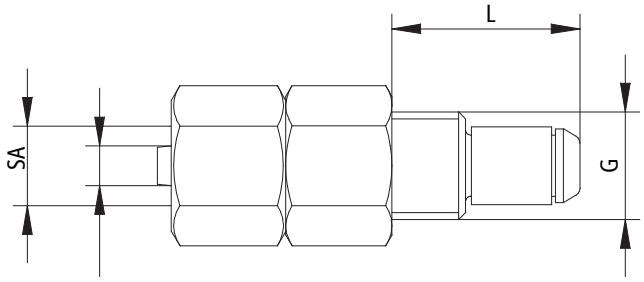

Fig. 2: Type S with integrated connection

Connection			
Hose clamp connection	SA	4/6, 6/8, 6/12	
Injection connection thread tap	G	G1/2	G1/4
	L	33	23

Table 7: Connections Type S with integrated connection

6.1.2 Type S with separate connection

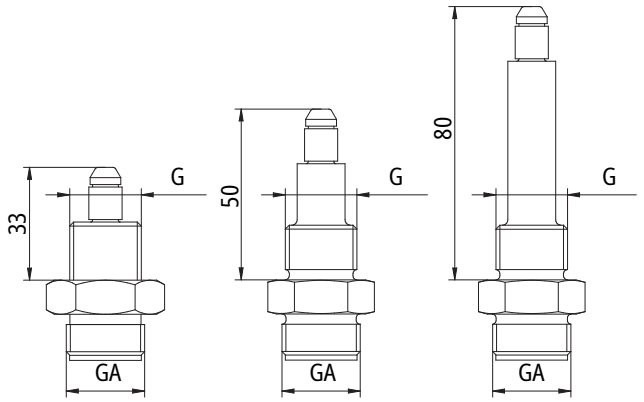

Fig. 3: Type S with separate connection

Connection		
Dosing line connection thread tap	GA	G5/8
Injection connection thread tap	G	G1/2

Table 8: Connections Type S with separate connection

6.1.3 Type SKD

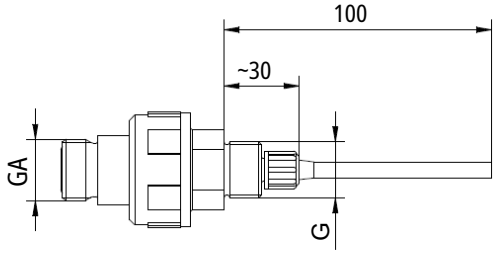

Fig. 4: Type SKD

Connection		
Dosing line connection thread tap	GA	G5/8
Injection connection thread tap	G	G1/2

Table 9: Connections Type SKD

6.1.4 Type SAH

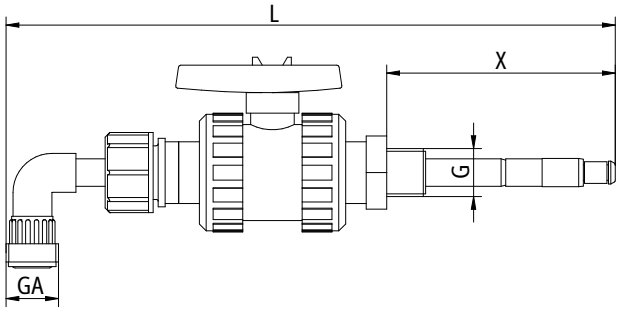

Fig. 5: Type SAH

Information			
Dosing line connection thread tap	GA	G5/8	
Injection connection thread tap	G	G1/2	
Pipe		DN100 – DN150	DN150 – DN400
Length injection pipe	X	30 mm – 100 mm	30 mm – 200 mm
Total length	L	267 mm	367 mm

Table 10: Type SAH

6.2 Injection nozzles with non-return valve

6.2.1 Type R

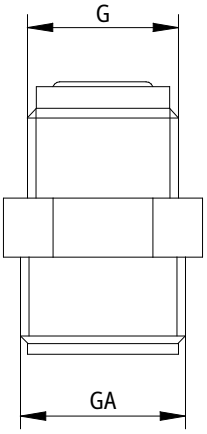

Fig. 6: Type R

Information						
Nominal width		DN4	DN6	DN10	DN15	DN25
Dosing line connection thread tap	GA	G5/8	G1	G1 1/4	G1 1/4	G1 1/2
Injection connection Thread tap	G	G1/2	G3/4	G1 1/4	G1	G1 1/2

Table 11: Type R

7 Installation

This section provides an overview of the installation of the injection nozzles including the hydraulic installation.

7.1 Hose injection nozzles

7.1.1 Injection nozzle S

The injection nozzle S in the most compact and simplest injection nozzle in the range.

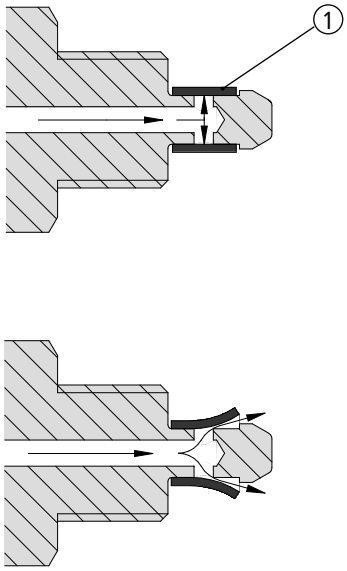

Fig. 7: Function hose valve

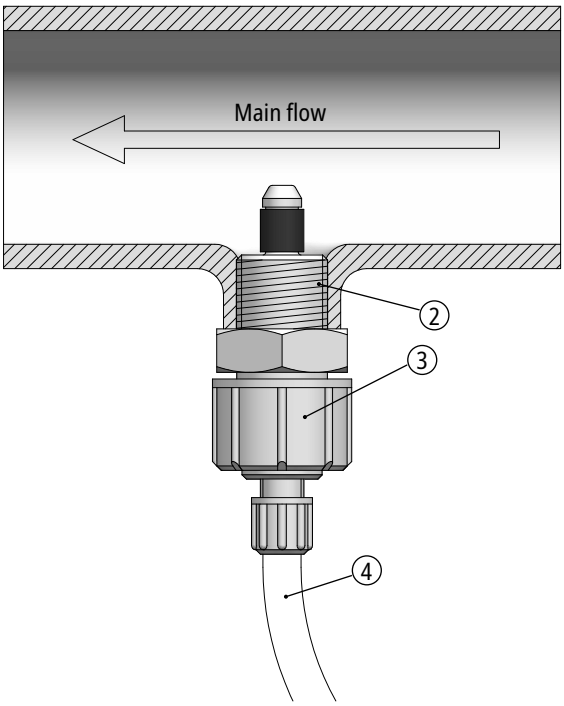

Fig. 8: Installing the injection nozzle S

The injection hose (1) on the tip performs the non-return function and thereby prevents flow back to the dosing pump. The hose is under pre-tension which ensures fine spraying of the medium to be dosed. The injection nozzle S is screwed into in a socket or a bypass in the main line with the screw-in thread (2). Any installation position is possible. The desired connection is fitted on the other side. This is usually specified by the dosing pump. In this example, a hose clamp connection (3). Hoses (4) or other weights that can impinge upon the injection nozzle must be supported!

7.1.2 Injection nozzle SAH

The injection nozzle SAH combines the simple principle of the type S injection nozzle with the quick dismantling feature of the injection nozzle to permit maintenance work. The immersion depth in the main line can be adapted.

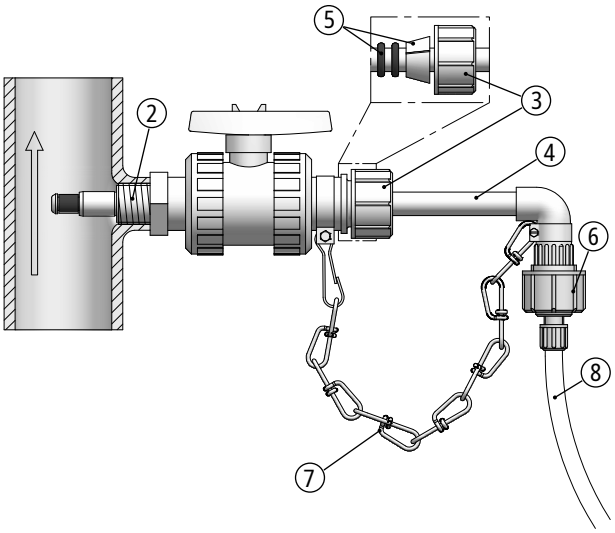

Fig. 9: Installation/function of the injection nozzle SAH

As with the type S injection nozzle, the non-return function is performed by a hose in the tip of the injection nozzle (→ Fig. 7: Function hose valve [▸ 13]).

The injection nozzle is screwed into a socket or bypass in the main line using the thread (2) located in the fore area.

7.1.2.1 Setting the length of the injection lance

1. Loosen the union nut (3) without unscrewing it completely from the thread!
2. Move the injection lance (4) lengthways.
3. Make sure that the O-rings and the seal cone (5) are clean and sit correctly.
4. Re-tighten the union nut (3).
5. The desired connection is fitted on the other end. This is usually specified by the dosing pump. In this example, it is a hose clamp connection (6). Hoses (8) or other weights that can impinge upon the injection nozzle must be supported!

⚐ Length set.

7.1.3 Injection nozzle SKD

The non-return function of the injection nozzle SKD is performed by a spring-loaded ball. The special feature of the injection nozzle SKD is its self-cleaning function, which is performed by the injection hose (2). The movements of the injection hose in the main flow cause the

deposits to loosen by themselves. Should the hose still remain blocked, the pressure of the dosing pump will widen it and soiling will fall out.

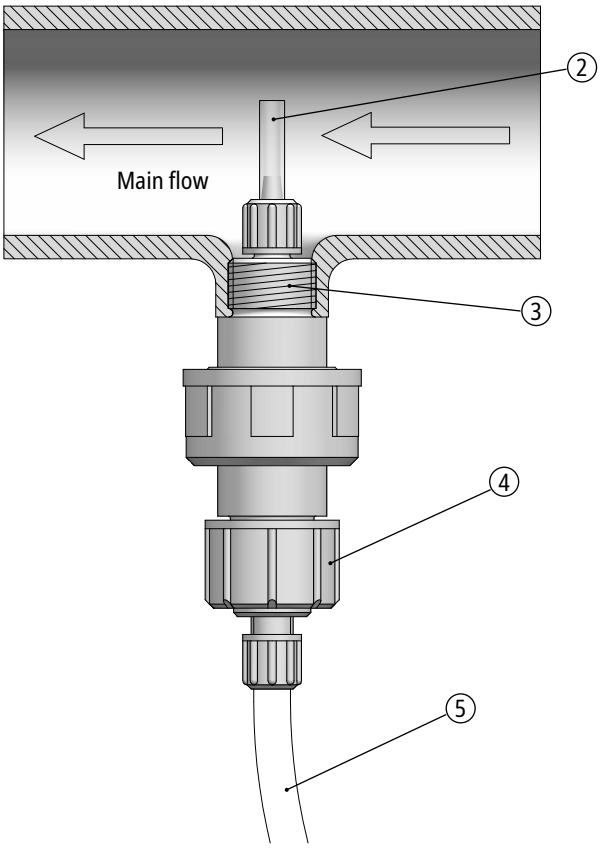

Fig. 10: Installation/function of the injection nozzle SKD

The injection hose (2) can be shortened to any length.

The screw-in thread (3) of the type SKD is located behind the injection hose with which the injection nozzle is screwed into a socket or a bypass in the main line.

The desired connection is fitted on the other side. This is usually specified by the dosing pump. In this example, a hose clamp connection (4).

Hoses (5) or other weights that can impinge upon the injection nozzle must be supported!

All sizes are available as a single ball non-return valve with an opening pressure of approx. 0.2 bar. Special designs are also available with an opening pressure of approx. 1.1 bar.

The injection nozzle R is screwed into a socket or bypass in the main line with the screw-in thread (1). The desired connection is fitted on the other side. This is usually specified by the dosing pump. In this example, a hose clamp connection (2).

Hoses (3) or other weights that can impinge upon the injection nozzle must be supported!

All sizes are available as a single ball non-return valve with an opening pressure of approx. 0.1 bar. Special designs are also available with an opening pressure of approx. 1.2 bar.

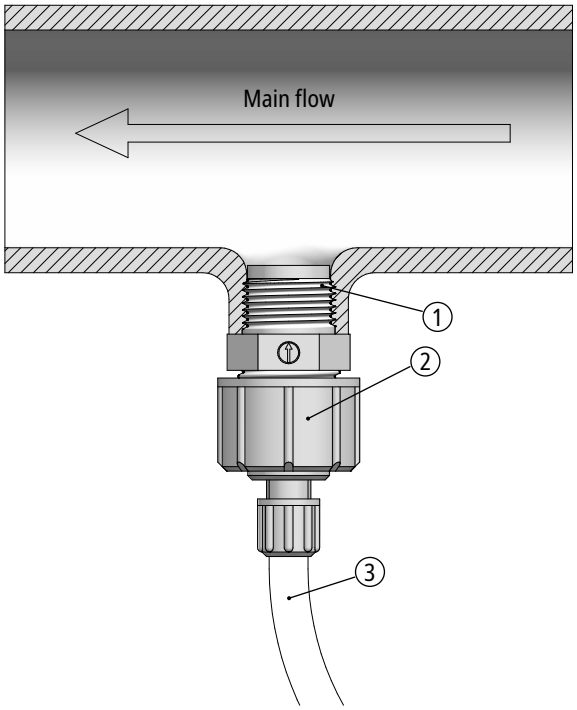

Fig. 11: Installing the injection nozzle R

7.2 Injection nozzles with non-return valve

7.2.1 Injection nozzle R

With the injection nozzle R, the non-return valve prevents liquid from flowing back out of the pressurised system into the dosing system or the dosing container.

8 Commissioning

WARNING

Chemical burns or other burns through dosing medium!

You may come into contact with dosing equipment when working on the product.

- ▶ Wear appropriate personal protective equipment, especially for the protection of eyes and skin.
- ▶ Avoid skin contact with the dosing medium.
- ▶ Check that all the screw connections have been tightened correctly and are leak-proof.
- ▶ Never look into open ends of plugged hoses and valves.

WARNING

Hazardous material!

Never use unsuitable dosing media such as flammable or radioactive media. The materials of the injection nozzles are not designed for use with such dosing media; use in this context can result in leaks which can cause serious injury and damage to the machine.

- ▶ Wear appropriate personal protective equipment, especially for the protection of eyes and skin.

Commissioning the injection nozzle

INFORMATION

Under normal conditions, you only need to screw the hydraulic connections finger-tight. However, due to the material settling, the pretension of the screw connection can slacken. This means that you must re-tighten the screw connection before carrying out commissioning.

✓ The injection nozzle was hydraulically installed.

1. Check for the correct installation of the seals.
2. Make sure that all screw connections and hose connections are fastened securely and check them for leak-tightness.
3. Secure the hose with hose clips or a union nut.

⚐ The injection nozzle has been commissioned.

9 Transport, storage and disposal

The injection nozzles are delivered in cardboard packaging and should always be transported in this packaging. The packaging material is re-usable. Empty and clean the injection nozzles before putting them into storage. Comply with the specifications pertaining to the ambient conditions (→ Technical data [▸ 10]).

Observe the following instructions when disposing of an old device:

- Clean the device thoroughly. In the case of hazardous dosing media, you must also neutralise and decontaminate it.
- Dispose of dosing medium residue properly.
- You must dispose of the device in accordance with local laws and regulations. It should not be disposed of as domestic waste!

As the disposal regulations may differ from country to country, please consult your supplier if necessary.

10 Accessories

- Hose clamp connection
- Hose clips connection
- Stick-on connection
- Cutting ring connection
- Threaded connection

Accessories for the type R injection nozzle

- **Flange** as an injection connection for the nominal width DN15 and DN25
- **Injection quill**: The injection pipe (1) enables the dosing chemical to be injected into the middle of the pipe system to ensure good mixing. It is shortened to the required length during installation.
- **Shutoff valve**: The shutoff valve (2) can be used to disconnect the dosing system, including the injection nozzle from the pressurised system. The shutoff valve enables maintenance to be performed on the injection nozzle after disconnection from the system. It should be closed before longer downtimes, as the leak-tightness of the injection nozzle can be compromised through dirt particles or wear.
- **Cooling pipe**: A cooling pipe serves the emission of heat, if dosing is to be performed in the system at high temperatures and the dosing line is made of plastic.

11 Maintenance

Our products are produced to the highest quality standards and have a long service life. However, some parts are subject to operational wear. This means that regular visual inspections are necessary to ensure a long operating life. Regular maintenance will protect the device from operation interruptions.

11.1 Maintenance intervals

The following table gives you an overview of the maintenance work to be carried out and how often:

Interval	Maintenance
Monthly	Visual check

Table 12: Maintenance intervals

11.2 Maintenance work

Check all seals as required and replace if necessary.

11.2.1 Dismantling the injection nozzle SAH for maintenance

The type SAH injection nozzle can be dismantled for maintenance.

1. Loosen the union nut (3) without unscrewing it completely from the thread!
2. Pull out the injection lance (4) until you feel resistance and the chain (7) is tensioned.
3. Close the ball valve (6).
4. Now disconnect the chain (7).
5. Then pull the injection lance (4) completely out of the ball valve.
6. Now perform the maintenance.
7. Slide the injection lance a little way into the injection nozzle.
8. Fasten the chain (7), to prevent the injection lance from being pushed out by the system pressure.
9. Open the ball valve.
10. When installing the injection lance (4) in the reverse order, make sure that the O-rings and the seal cone (5) under the union nut (3) are clean and sit correctly.

⚐ Maintenance completed.

12 Decontamination declaration

Due to legal regulations for the protection of our employees and operating facilities, we need the completed and signed declaration of decontamination in order to process your return.

1. Copy this page and complete it **for each device separately**!
2. Attach the declaration to the outside of the packaging.
3. Return the device.

Decontamination declaration

We forward the following device for repairs:

Device designation: ..... Part no.: .....

Order no.: ..... Date of delivery: .....

Reason for repair: .....

.....

.....

Medium dosed

Description: ..... Irritant: ☐ Yes ☐ No

Properties: ..... Corrosive: ☐ Yes ☐ No

We hereby certify that the device has been thoroughly cleaned inside and out before being returned, contains no hazardous chemical, biological and radioactive agents and has been drained of oil.

If the manufacturer has to perform additional cleaning, we shall be invoiced the costs incurred.

We certify that the aforementioned information is correct and complete and that the device will be returned in accordance with legal requirements.

Company / Address: ..... Phone: .....

..... Fax: .....

..... E-mail: .....

Customer no.: ..... Contact person: .....

Date, Signature: .....

13 Warranty claim

If the device breaks down within the period of warranty, please return it in a cleaned condition with the fully completed warranty claim.

1. Copy this page and fill in all fields.
2. Pack the device together with the completed warranty claim.
3. Return the device.

Warranty claim

Date: .....

Sender

Company: ..... Phone: .....

Address: ..... Fax: .....

..... E-mail: .....

..... Contact person: .....

Manufacturer order no.: ..... Delivery date: .....

Device type: ..... Serial number: .....

Nominal power / nominal pressure: .....

Fault details: .....

.....

.....

.....

.....

.....

Operating conditions of the device

Application site / site description: .....

.....

.....

Accessories used: .....

.....

.....

Commissioning (date): ..... Operating hours (approx.): .....

Please state the specific characteristics of the installation and enclose a basic sketch or photograph of the installation, indicating the materials, diameters, lengths and heights.

.....

BA-12303-01-EN / 1 / 19/08/2025

Notes