Flow Meter

FLOWCON LP 1 / LP2

Operating Instructions

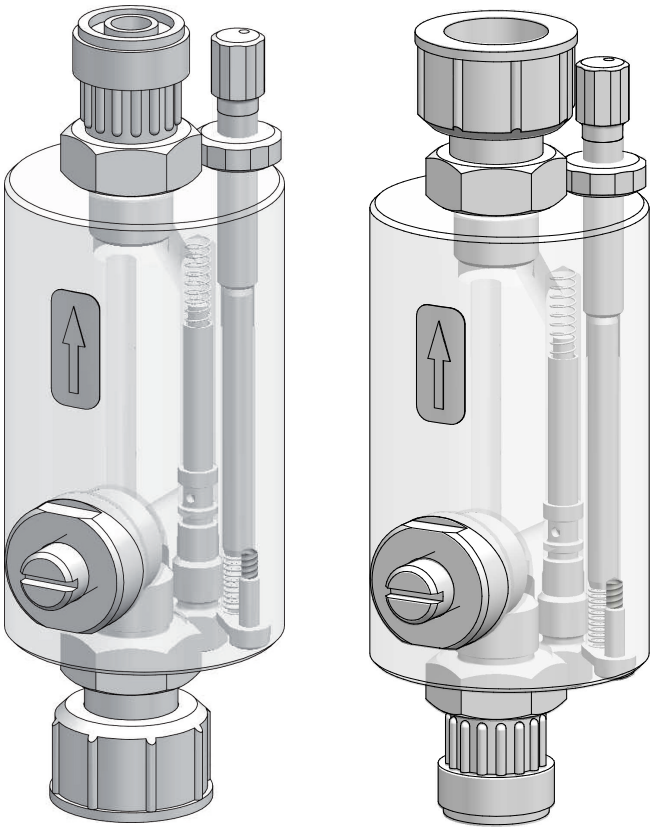

Read the Operating Instructions!

The user is responsible for installation and operation related mistakes!

Original Operating Instructions

© Lutz-Jesco GmbH 2015

BA-13312-02-V02

Dosing Conveying Control | Liquids Gases Systems

Table of Contents

1 Notes for the Reader ... 4
General non-discrimination ... 4
Explanation of the signal words ... 4
Explanation of the warning signs ... 4
Identification of warnings ... 4
Instruction for action identification ... 4

2 Safety ... 5
General warnings ... 5
Hazards due to non-compliance with the safety instructions ... 5
Working in a safety-conscious manner ... 5
Personal protective equipment ... 5
Personnel qualification ... 6

3 Intended use ... 7
Notes on product warranty ... 7
Intended purpose ... 7
Device revision ... 7
Prohibited dosing media ... 7

4 Product description ... 8
Scope of delivery ... 8
Structure of the device ... 8
Function ... 8
Rating plate ... 8
Technical data ... 9

5 Dimensions ... 10
Flow meter FLOWCON LP 1 / LP2 ... 10
Base for FLOWCON LP1 ... 10
Wall holder for FLOWCON LP1 and LP2 ... 10

6 Installation ... 11
Activate FLOWCON LP 1 ... 11
Installing FLOWCON LP 2 ... 12
Adjust to the viscosity of the metered medium ... 12

7 Operation ... 13
FLOWCON LP 1 / LP2 Commissioning ... 13
Maintenance ... 14
Storage ... 15
Transportation ... 15
Disposal of old equipment ... 15

8 EC Declaration of Conformity ... 16

9 Declaration of Harmlessness ... 17

10 Warranty Application ... 18

11 Index ... 19

© Lutz-Jesco GmbH 2015
Subject to technical changes.
150616

1 Notes for the Reader

This operating manual contains information and behaviour rules for the safe and designated operation of the device.

Observe the following principles:

- read the entire operating manual prior to inaugurating the device.
- ensure that everyone who works with or on the device has read the operating manual and follows the instructions.
- maintain the operating manual throughout the service life of the device.
- pass the operating manual on to any subsequent owner of the device.

1.1 General non-discrimination

In these operating instructions, only the male gender is used where grammar allows gender allocation. The purpose of this is to make the text easy to read. Men and women are always referred to equally. We would like to ask female readers for understanding of this text simplification.

1.2 Explanation of the signal words

Different signal words in combination with warning signs are used in this operating manual. Signal words illustrate the gravity of possible injuries if the risk is ignored:

Signal word	Meaning
DANGER	Refers to imminent danger. Ignoring this sign may lead to death or the most serious injuries.
WARNING	Refers to a potentially hazardous situation. Failure to follow this instruction may lead to death or severe injuries.
CAUTION	Refers to a potentially hazardous situation. Failure to follow this instruction may lead to minor injury or damage to property.
NOTICE	Refers to a danger which, if ignored, may lead to risk to the machine and its function.

1.3 Explanation of the warning signs

Warning signs represent the type and source of a danger:

Warning sign	Type of danger
	Danger of caustic or other burns
	General danger zone
	Danger of damage to machine or functional influences

1.4 Identification of warnings

Warnings are intended to help you recognise risks and avoid negative consequences.

This is how warnings are identified:

Warning sign	**SIGNAL WORD**

Description of danger.

Consequences if ignored.

⇨ The arrow signals a safety precaution to be taken to eliminate the danger.

1.5 Instruction for action identification

This is how pre-conditions for action are identified:

✓ Pre-condition for action which must be met before taking action.

This is how instructions for action are identified:

➔ Separate step with no follow-up action.

1. First step in a series of steps.
2. Second step in a series of steps.

▸ Result of the above action.

✓ **Action completed, aim achieved.**

© Lutz-Jesco GmbH 2015

2 Safety

2.1 General warnings

The following warnings are intended to help you to eliminate the dangers that can arise while handling the device. Risk prevention measures always apply regardless of any specific action.

Safety instructions warning against risks arising from specific activities or situations can be found in the respective sub-chapters.

WARNING

Caustic burns or other burns through dosing media!

While working on the dosing head, valves and connections, you may come into contact with dosing media.

- ⇨ Use sufficient personal protective equipment.
- ⇨ Rinse the dosing pump with a liquid (e.g. water) which does not pose any risk. Ensure that the liquid is compatible with the dosing medium.
- ⇨ Release pressure in hydraulic parts.
- ⇨ Never look into open ends of plugged pipelines and valves.

WARNING

Caustic burns or other burns through dosing media!

The materials of the dosing pump and hydraulic parts of the system must be suitable for the dosing medium that is used. Should this not be the case, the dosing media may leak.

- ⇨ Make sure that the materials you are using are suitable for the dosing medium.
- ⇨ Make sure that the lubricants, adhesives, sealants, etc. that you use are suitable for the dosing medium.

CAUTION

Increased risk of accidents due to insufficient qualification of personnel!

Dosing pumps and their accessories may only be installed, operated and maintained by personnel with sufficient qualifications. Insufficient qualification will increase the risk of accidents.

- ⇨ Ensure that all action is taken only by personnel with sufficient and corresponding qualifications.
- ⇨ Prevent access to the system for unauthorised persons.

CAUTION

Danger of personal injury and material damage!

Changing dosing media can lead to unpredictable reactions.

- ⇨ Thoroughly clean the dosing pump and appropriate sections of the plant to avoid chemical reactions.

2.2 Hazards due to non-compliance with the safety instructions

Failure to follow the safety instructions may endanger not only persons, but also the environment and the device.

The specific consequences can be:

- failure of important functions of the device and of the corresponding system,
- failure of required maintenance and repair methods,
- danger to persons,
- danger to the environment caused by substances leaking from the system.

2.3 Working in a safety-conscious manner

Besides the safety instructions specified in this operating manual, further safety rules apply and must be followed:

- accident prevention regulations
- safety and operating provisions,
- safety regulations on handling hazardous substances,
- environmental protection provisions,
- applicable standards and legislation.

2.4 Personal protective equipment

Depending on the type of work you are carrying out, you must use appropriate protective equipment. Read the Accident Prevention Regulations and the Safety Data Sheets to the dosing media find out what protective equipment you need.

As a minimum, the following protective equipment is recommended:

Protective clothing

Protective gloves

Goggles

© Lutz-Jesco GmbH 2015
Subject to technical changes.
150616

Corresponding protective equipment must be used during these tasks:

- commissioning,
- working on the dosing pump while running,
- shutdown,
- maintenance work,
- disposal.

2.5 Personnel qualification

Any personnel who work on the device must have appropriate special knowledge and skills.

Anybody who works on the product must meet the conditions below:

- attendance at all the training courses offered by the owner,
- personal suitability for the respective activity,
- sufficient qualification for the respective activity,
- training in how to handle the device,
- knowledge of safety equipment and the way this equipment functions,
- knowledge of this operating manual, particularly of safety instructions and sections relevant for the activity,
- knowledge of fundamental regulations regarding health and safety and accident prevention.

All persons must generally have the following minimum qualification:

- training as specialists to carry out work on the device unsupervised,
- sufficient training that they can work on the device under the supervision and guidance of a trained specialist.

These Operating instructions differentiate these user groups:

2.5.1 Specialist staff

Specialist staff are able, thanks to their professional training, knowledge and experience as well as knowledge of the respective provisions, to do the job allocated to them and recognise and/or eliminate any possible dangers by themselves.

2.5.2 Trained persons

Trained persons have received training from the operator about the tasks they are to perform and about the dangers stemming from improper behaviour.

Trained persons have attended all trainings offered by the operator.

2.5.3 Personnel tasks

In the table below, you can check what personnel qualifications are required for the respective tasks. Only people with appropriate qualifications are allowed to perform these tasks.

Qualification	Activities
Specialist staff	■ Assembly ■ Hydraulic installations ■ Commissioning ■ Taking out of operation ■ Maintenance ■ Repairs ■ Disposal ■ Fault rectification
Trained persons	■ Storage ■ Transportation ■ Control

© Lutz-Jesco GmbH 2015

3 Intended use

3.1 Notes on product warranty

Any non-designated use of the device can impair its function and the protection provided. This leads to invalidation of any warranty claims!

Please note that liability is on the side of the user in the following cases:

- the device is operated in a manner which is not consistent with these operating instructions, particularly safety instructions, handling instructions and chapter Intended use
- Information on usage and environment (see "Technical data" on page 9) is not adhered to.
- if people operate the device who are not adequately qualified to carry out their respective activities.
- No original spare parts or accessories of Lutz-Jesco GmbH are used.
- Unauthorised changes are made to the device.
- The user uses different dosing media than those indicated in the order.
- Maintenance and inspection intervals are not adhered to as required or not adhered to at all.
- The device is commissioned before it or the corresponding system has been correctly and completely installed.
- Safety equipment has been bridged, removed or made inoperative in any other way.
- The user does not use dosing media under the conditions agreed with the manufacturer such as modified concentration, density, temperature, contamination, etc.

3.2 Intended purpose

The flow meter FLOWCON LP 1 / LP2 is intended for the following purpose: Monitoring an oscillating volume flow during delivery through a solenoid diaphragm dosing pump of the type MAGDOS LP 05 – 15 (FLOWCON LP 1) or MEMDOS SMART LP 2 - 20 (FLOWCON LP 2).

> FLOWCON LP 2 is intended for use with SMART MEMDOS LP in normal suction operation.
> When operating in slow motion mode the resulting suction pulse is too low.

3.3 Device revision

This operating manual applies to the following devices:

Device	Month / year of manufacture
Flow Meter FLOWCON LP 1 / LP2	11/2013 onwards

The production date is indicated on the rating plate.

3.4 Prohibited dosing media

The device must not be used for the following media and substances:

- Gaseous media,
- radioactive media,
- solid substances,
- combustible media,
- Media with viscosities greater than 400 mPa s (MAGDOS LP 05-10) or more than 40 mPa.s (MAGDOS LP 15 and LP MEMDOS SMART 2-20).

© Lutz-Jesco GmbH 2015
Subject to technical changes.
150616

4 Product description

4.1 Scope of delivery

Carefully check the delivery prior to installation and refer to the delivery note to ensure the delivery is complete and to check for any transport damage. Contact the supplier and/or carrier regarding any questions concerning the delivery and/or transport damage. Do not operate defective devices.

The scope of delivery includes:

- Flow meter FLOWCON LP 1 / LP2
- Spring for various viscosity ranges
- Operating instructions

4.2 Structure of the device

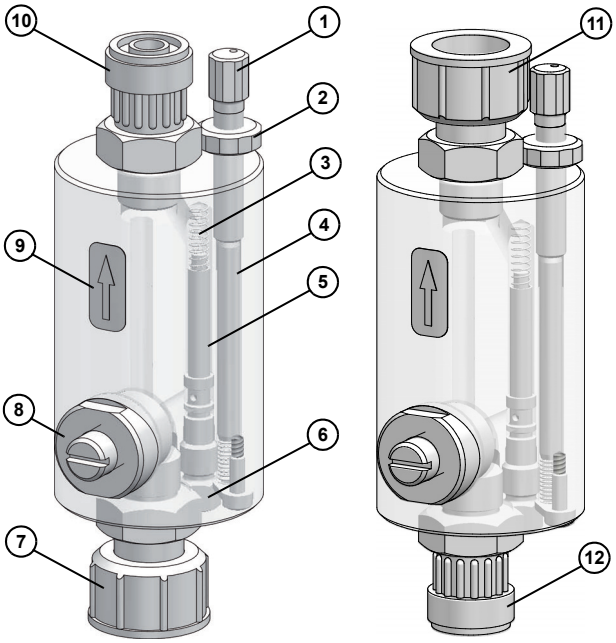

Fig. 4-1: Structure of the device

Position	Description
1	Adjusting screw for the reed switch
2	Counternut
3	Spring for viscous metered media
4	Reed contact
5	Float
6	Nozzle screw
7	FLOWCON LP 1 input, G 5/8", union nut
8	Bypass valve
9	Arrow indicating the direction of throughflow of the dosing medium
10	FLOWCON LP 1 output, G 5/8", threaded pin
11	FLOWCON LP 2 output, G 5/8", union nut
12	FLOWCON LP 2 input, G 5/8", threaded pin

4.3 Function

The flow meter FLOWCON LP 1 / LP2 was specially developed for monitoring oscillating volume flows. The function is based on the evaluation of the pulsating dosing quantity that typically occurs in dosing pumps.

During the pressure stroke (LP1) or suction stroke (LP2), a float is lifted from the flowing fluid, thus activating a reed switch. By adjusting the switch point, it is possible to monitor the dosing quantity previously determined by gauging.

This makes it possible not only to sense whether the dosing pump is delivering fluid, but also whether the set dosing capacity is achieved. Assuming equal pressure and viscosity of the medium, the rate of reproducibility is 10—20%.

4.4 Rating plate

The rating plate contains information on the safety and functional method of the product. The rating plate must be kept legible for the duration of the service life of the product.

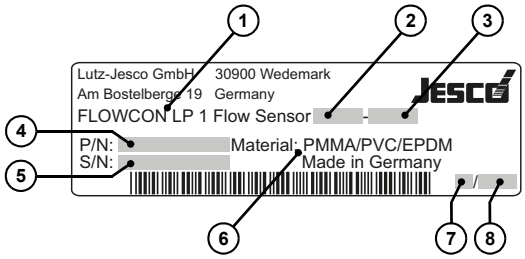

Fig. 4-2: Rating plate

Position	Meaning
1	Product name
2	Connection suction side
3	Connection discharge side
4	Part number
5	Serial number
6	Materials
7	Month of manufacture
8	Year of manufacture

© Lutz-Jesco GmbH 2015

4.5 Technical data

Description		Value
Housing material		PMMA/PVC
Sealing material		FPM or EPDM
Connection LP 1	Input	Union nut G 5/8
	Output	Threaded pin G 5/8
Connection LP 2	Input	Threaded pin G 5/8
	Output	Union nut G 5/8
Dosing range		MAGDOS LP 05 – 15 MEMDOS SMART LP 2 - 20
Max. viscosity		MAGDOS LP 05 - 10: max. 400 mPa s MAGDOS LP 15: max. 40 mPa s MEMDOS SMART LP2 - 20: max. 40 mPa s
Max. backpressure		16 bar 1 bar at the suction-side installation of LP2
Max. stroke frequency		250 min^{-1}
Approved media temperature		5 – 35 °C
Approved ambient temperature		0 – 40 °C
Switching capacity reed switch		48V AC/DC, 0.5A, max. 12VA
Weight		0.31 kg

© Lutz-Jesco GmbH 2015
Subject to technical changes.
150616

5 Dimensions

All dimensions in mm

5.1 Flow meter FLOWCON LP 1 / LP2

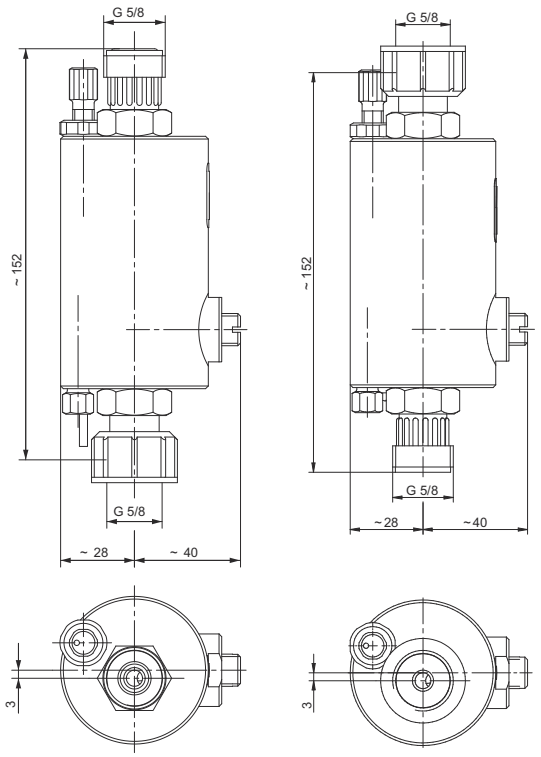

Fig. 5-1: Dimensioned drawing of flow meter FLOWCON LP 1 / LP2

5.2 Base for FLOWCON LP1

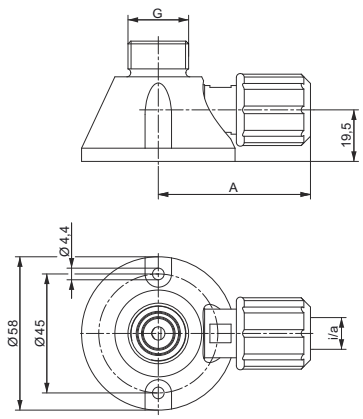

Fig. 5-2: Base

G	i/a	A
G 5/8	4/6"	45
	6/12"	58

5.3 Wall holder for FLOWCON LP1 and LP2

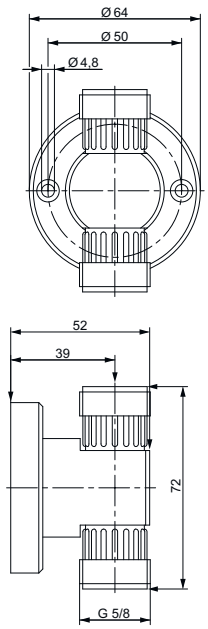

Fig. 5-3: Wall holder

© Lutz-Jesco GmbH 2015

6 Installation

Notes on assembly:

- The flow sensor can be mounted directly on the pressure valve (LP 1) or on the suction side (LP 2) of the dosing pump.
- If it cannot be mounted on the discharge valve, the FLOWCON can also be mounted with the help of a pedestal (LP1) or wall holder (LP1 and LP2).
- The FLOWCON LP1 or LP2 must always be assembled in the vertical position.
- The arrow indicating the flow direction of the metered medium must always point upwards.
- Since the pulsating flow of the dosing pump is evaluated, there must be no damping between the discharge valve of the dosing pump and FLOWCON caused by excessive restrictor resistance or pulsation dampers.
- When laying the hose, make sure that no loops are created between the dosing pump and FLOWCON. The entrapped air or gas can impair the function of the FLOWCON.
- Hose lengths greater than 1 m should be avoided.
- Magnetic and iron-containing objects (such as tools) in the vicinity of the FLOWCON could influence the function.
- Assembly directly beside or above the drive magnets in the dosing pump can lead to faults. A minimum distance of 10 cm should be maintained.

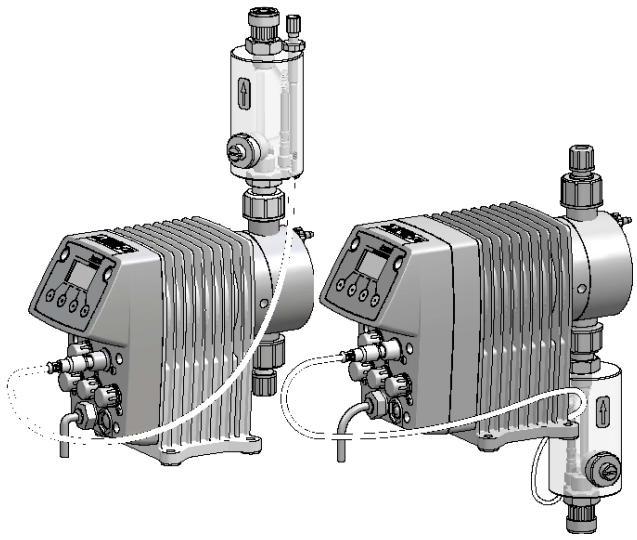

Fig. 6-1: Installation on the dosing pump

6.1 Activate FLOWCON LP 1

Precaution for action:

✓ You have disconnected the dosing pump from the mains supply.

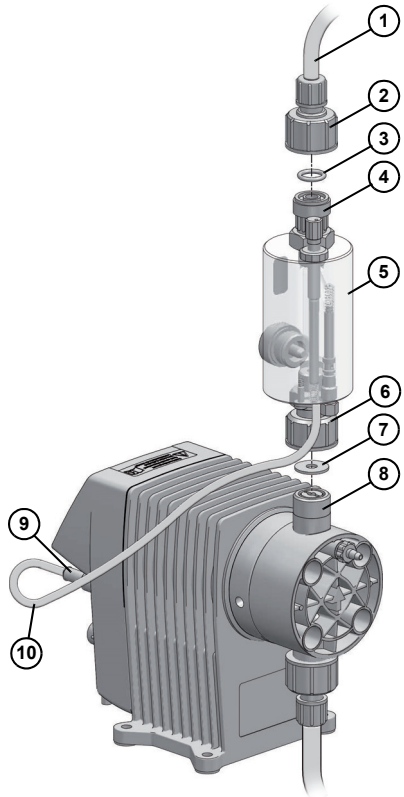

Fig. 6-2: Installing FLOWCON LP 1

Perform following steps:

1. Place a gasket (7) that is suitable for the metered medium between FLOWCON LP 1 (5) and the discharge valve on the dosing pump (8).
2. Screw the FLOWCON LP 1 (5) using the union nut (6) onto the discharge valve (8) of the dosing pump.
3. Place a gasket (3) that is suitable for the metered medium between FLOWCON LP 1 (5) and connect (2) of the pressure line (1).

> Assembly instructions for the various connection types can be found in the operating manual for the dosing pump.

4. Screw the connection (2) onto the connection of the FLOWCON LP 1 (4).
5. Connect the connecting cable (10) of the FLOWCON LP 1 to the connection port 5 (dosing control input) on the dosing pump. Screw the union nut all the way onto the M12x1 plug connector (9) to ensure sufficient contact and tightness.

✓ **FLOWCON LP 1 installed.**

© Lutz-Jesco GmbH 2015
Subject to technical changes.
150616

6.2 Installing FLOWCON LP 2

Precaution for action:

✓ You have disconnected the dosing pump from the mains supply.

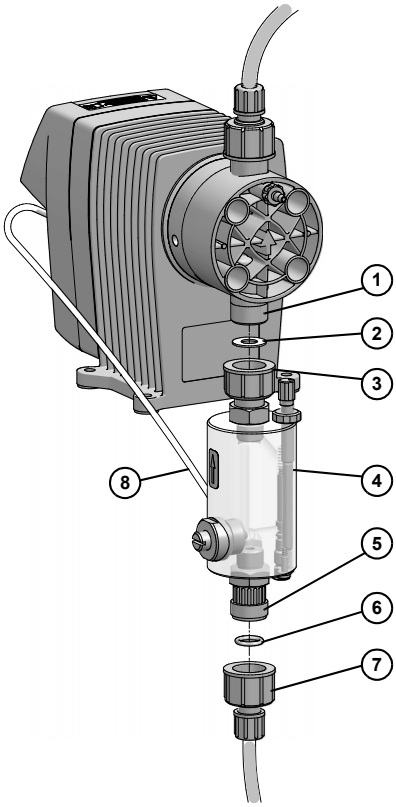

Fig. 6-3: Installing FLOWCON LP 2

Perform following steps:

1. Place a gasket (2) that is suitable for the metered medium between FLOWCON LP 2 (4) and the suction side on the dosing pump (1).
2. Screw the FLOWCON LP 2 (4) using the union nut (3) onto the discharge valve (1) of the dosing pump.
3. Place a gasket (6) that is suitable for the dosing medium between the FLOWCON LP 2 (4) and the hose connection (7).

> Assembly instructions for the various connection types can be found in the operating manual for the dosing pump.

4. Screw the connection (7) onto the connection of the FLOWCON LP 2 (5).
5. Connect the connecting cable (8) of the FLOWCON LP 2 to the connection port 5 (dosing control input) on the dosing pump. Screw the union nut all the way onto the M12x1 plug connector to ensure sufficient contact and tightness.

✓ **FLOWCON LP 2 installed.**

6.3 Adjust to the viscosity of the metered medium

To guarantee the correct function of the flow meter FLOWCON LP 1 or LP 2, it is necessary to adjust it to the viscosity of the metered medium used. If necessary, you can remove or replace the spring that is located in the bypass above the float.

The following configuration is recommended for the different viscosities:

Viscosity of the metered medium	Configurating FLOWCON LP 1
0 – 10 mPa s	Operation without spring
10 – 150 mPa s	Operation with standard spring
150 – 400 mPa s	Operation with stronger spring (included in scope of delivery)

Viscosity of the metered medium	Configurating FLOWCON LP 2
0 – 10 mPa s	Operation without spring
10 – 40 mPa s	Operation with enclosed spring

Precaution for action:

✓ The device was thoroughly rinsed.

✓ The device was emptied.

✓ The device was dismounted.

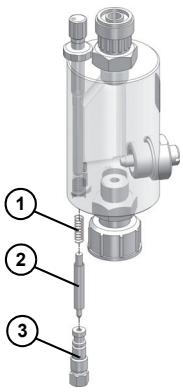

Fig. 6-4: Replace the spring

Perform following steps:

1. Unscrew the nozzle screw (3) counterclockwise.
2. Remove the float (2) and spring(1).
3. Insert a suitable spring (for viscosities below 10 mPa s, the spring is not required) as shown in the table.
4. Insert the float (2) with the pointed end facing down.
5. Screw in the nozzle screw (3) clockwise. Do not use a tool for this! Tighten the nozzle screw by hand.

✓ **FLOWCON LP 1 / LP2 adjusted to viscosity of the dosing medium.**

© Lutz-Jesco GmbH 2015

7 Operation

7.1 FLOWCON LP 1 / LP2 Commissioning

Precaution for action:

✓ The flow meter FLOWCON LP 1 / LP2 was installed hydraulically and electrically in accordance with section "Installation" (see page 11).

✓ The dosing pump MAGDOS LP or MEMDOS SMART LP was installed hydraulically and electrically in accordance with the relevant operating manual.

✓ The dosing pump MAGDOS LP or MEMDOS SMART LP went into operation.

7.1.1 Venting

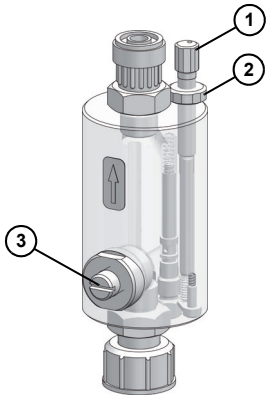

Fig. 7-1: FLOWCON LP 1 / LP2

Perform following steps:

1. Open the bypass valve (3), by unscrewing it counterclockwise with a screwdriver all the way to the end stop.
2. Press `Menu`.
3. Use or ↓ to select the menu item *Venting* and press `OK`.
4. Press and hold the `Start` key.
   ▶ The dosing pump starts delivery at the highest stroke frequency.
5. Release the `Start` key as soon as no more air bubbles escape.
   ▶ The dosing pump stops delivery.
6. Close the bypass valve (3).

✓ **FLOWCON LP 1 / LP2 vented.**

7.1.2 Activating FLOWCON LP 1 / LP2

1. Press `Menu`.
2. Use or ↓ to select the menu item *System setup* and press `OK`.
3. Use or ↓ to select the menu item *Dosing control* and press `OK`.
   ▶ The dosing pump displays the menu 6.9 *Dosing control*. *not active* is pre-set as the mode.

```
6.9 Dosing control
        not active
Back    Mode
```

Fig. 7-2: Dosing control "not active"

4. Press `Mode`.

✓ **Flow meter FLOWCON LP 1 / LP2 activated.**

In the factory settings, the parameters are set up as follows:

```
6.9 Dosing control
    Flowcon ( 5 )
    Pump On
Back  Mode  Stop  Setup
```

Fig. 7-3: Dosing control parameters

Parameter	Value	Meaning
Faulty strokes	5	This setting permits 5 registered faulty strokes. After the 5th faulty stroke, the message "Flowcon error" appears in the display on the dosing pump.
Pump	On	If this setting is set to *On*, the dosing pump continues to run if the set number of faulty strokes is reached.
Adjust	Error	The adjustment was not yet or not correctly performed.

7.1.3 Deactivating FLOWCON LP 1 / LP2

1. Press `Menu`.
2. Use or ↓ to select the menu item *System setup* and press `OK`.
3. Use or ↓ to select the menu item *Dosing control* and press `OK`.
4. Press `Mode`.

✓ **Flow meter FLOWCON LP 1 / LP2 deactivated.**

7.1.4 Set behaviour in the event of an error

1. Press `Menu`.
2. Use or ↓ to select the menu item *System setup* and press `OK`.
3. Use or ↓ to select the menu item *Dosing control* and press `OK`.
4. Press `Stop`.
   ▶ The dosing pump is set to *Stop* and stops as soon as the permitted number of faulty strokes is exceeded and the "Flowcon error" message appears.

```
6.9 Dosing control
    Flowcon ( 5 )
    Pump Stop
Back  Mode  On  Setup
```

Fig. 7-4: Dosing control "Pump Stop"

➔ Press `On`.
▶ The dosing pump is set to *ON* and does not stop when the "Flowcon error" message appears.

© Lutz-Jesco GmbH 2015
Subject to technical changes.
150616

```
6.9 Dosing control
    Flowcon ( 5 )
    Pump On
Back  Mode  Stop  Setup
```

Fig. 7-5: Dosing control "Pump On"

✓ **Behaviour in the event of an error set.**

7.1.5 Set faulty strokes

1. Press `Menu`.
2. Use ↓ or ↓ to select the menu item *System setup* and press `OK`.
3. Use ↓ or ↓ to select the menu item *Dosing control* and press `OK`.
4. Use ↓ or ↓ to select the menu item *Faulty strokes* and press `OK`.
5. Use `+` and `-` to set the desired value. Adjustment range: 0 – 20 faulty strokes.

> If the set number of permissible faulty strokes is not reached within 100 dosing strokes, the faulty strokes previously saved are deleted again. This avoids an unnecessary fault message, e.g. due to isolated gas bubbles (e.g. 1 faulty stroke/100 dosing strokes = 1% dosing error).

6. Press `OK`.

✓ **Faulty strokes set.**

7.1.6 Perform adjustment

The FLOWCON LP 1 / LP2 contains a reed switch whose closing time is used to determine whether or not dosing strokes are correctly executed. To ensure that this functions, the FLOWCON LP 1 / LP2 must be set to the delivery capacity of the dosing pump and the viscosity of the metered medium used. To do this, use the menu item *Adjust*.

Perform following steps:

1. Press `Menu`.
2. Use ↓ or ↓ to select the menu item *System setup* and press `OK`.
3. Use ↓ or ↓ to select the menu item *Dosing control* and press `OK`.
4. Use ↓ or ↓ to select the menu item *Adjust* and press `OK`.

The menu displays a symbol for the reed switch:

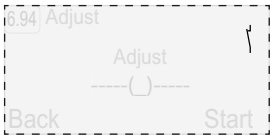

Fig. 7-6: Menu "Adjust" with symbol for closed contact

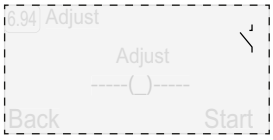

Fig. 7-7: Menu "Adjust" with symbol for open contact

5. The symbol should be open. If it is closed, turn the adjusting screw (1) (see fig. 7-1 on page 13) counterclockwise until the contact symbol is open.
6. Turn the adjusting screw (1) slowly clockwise until the contact symbol is closed.
7. Unscrew the adjusting screw (1) again by three turns.
   ▶ The contact symbol is open.
8. Open the bypass valve (3), by unscrewing it counterclockwise with a screwdriver all the way to the end stop.
9. Press `Start`.
   ▶ The dosing pump starts conveying at approx. 20 strokes per minute.
10. Slowly close the bypass valve (3) with a screwdriver until the contact symbol closes with every dosing stroke. Once this point is reached, a circular symbol appears on the display. This symbol is used to find the optimum switch point for the reed switch.

The optimum switch point is reached if the circular symbol is precisely centred between the brackets:

```
6.94 Adjust
          Adjust
       -----(O)-----
Back              Start
```

Fig. 7-8: Optimum switch point

The circular symbol can be moved as follows:

Adjusting screw (1)	Circular symbol movement
Unscrew	to the left
Screw in	to the right

11. Slowly screw in or unscrew the adjusting screw (1) until the circular symbol is positioned inside the brackets and remains there. If the circular symbol is not displayed, you have turned the adjusting screw too far in one direction. The contact symbol will no longer close. Turn the adjusting screw (1) in the other direction.
12. Tighten the counternut (2) clockwise. While doing so, hold the adjusting screw (1) securely to avoid losing the setting.
13. Press `Back`.
    ▶ The *Adjust* parameter is set to "OK".

```
6.9 Dosing control
    Faulty strokes  5
    Pump            Stop
    Adjust          OK
Back  Mode  On  Setup
```

Fig. 7-9: Adjust "OK"

✓ **Adjustment performed.**

7.2 Maintenance

- The flow meter FLOWCON LP 1 / LP2 should be checked regularly (at least every six months) to ensure that the connections and deliver lines are leaktight.
- When aggressive media are dosed, the maintenance intervals are shorter.

© Lutz-Jesco GmbH 2015

- Some metered media can cause the float to get stuck. In these cases, the device should be regularly cleaned to prevent malfunctions.

The following maintenance sets are available as options:

Description	Part number
Seal set G5/8" FPM Consisting of: ■ 6 O-rings ■ 1 flat gasket	38200
Gasket set G5/8" EPDM Consisting of: ■ 6 O-rings ■ 1 flat gasket	40911

7.3 Storage

Storing the device correctly will extend its service life. You should avoid negative influences such as extreme temperatures, high humidity, dust, chemicals, etc.

Ensure ideal storage conditions where possible:

- the storage place must be cold, dry, dust-free and generously ventilated,
- temperatures between + 2 °C and + 40 °C,
- Relative air humidity must not exceed 90 %.

7.4 Transportation

Perform following steps:

- The unit should be thoroughly cleaned. Any dangerous dosing media must be additionally neutralised and decontaminated.
- All openings should be closed, so that no foreign objects can get into the system.
- The device must be suitably packed, preferably in the original packing, and shipped.

If the device is sent back to the manufacturer, please follow chapters "Declaration of Harmlessness" (see page 17) and "Warranty Application" (see page 18).

7.5 Disposal of old equipment

- The waste unit must be thoroughly cleaned. Any dangerous dosing media must be additionally neutralised and decontaminated.
- Any residual dosing media must be removed in a professional manner.
- The device must be disposed of in accordance with applicable local laws and regulations. It should not be disposed of as domestic waste!
- As the disposal regulations may differ from country to country, please consult your supplier if necessary.
- In Germany, the manufacturer must provide free-of-charge disposal, provided the device has been safely returned along with a declaration of no objection (see page 17).

© Lutz-Jesco GmbH 2015
Subject to technical changes.
150616

8 EC Declaration of Conformity

(DE) Einbauerklärung im Sinne der EG-Richtlinie 2006/42/EG über Maschinen (Anhang II B)
Hiermit erklären wir, dass die nachstehend beschriebene unvollständige Maschine alle grundlegenden Anforderungen der Maschinenrichtlinie 2006/42/EG erfüllt, soweit es im Rahmen des Lieferumfangs möglich ist. Ferner erklären wir, dass die speziellen technischen Unterlagen gemäß Anhang VII Teil B dieser Richtlinie erstellt wurden. Wir verpflichten uns, den Marktaufsichtsbehörden auf begründetes Verlangen die speziellen Unterlagen zu der unvollständigen Maschine über unsere Dokumentationsabteilung zu übermitteln. Die unvollständige Maschine darf erst dann in Betrieb genommen werden, wenn ggf. festgestellt wurde, dass die Maschine oder Anlage, in welche die unvollständige Maschine eingebaut werden soll, den Bestimmungen der Richtlinie 2006/42/EG über Maschinen entspricht und die EG-Konformitätserklärung gemäß Anhang II A ausgestellt ist.

(EN) Declaration of Incorporation according to EC directive 2006/42/EC on machinery (Annex II B)
Herewith we declare, that the partly completed machinery described below is complying with all essential requirements of the Machinery Directive2006/42/EC, as far as the scope of delivery allows. Additional we declare that the relevant technical documentation is compiled in accordance with part B of Annex VII. We commit to transmit, in response to a reasoned request by the market surveillance authorities, relevant documents on the partly completed machinery by our documentation department.The partly completed machinery must not be put into service until the final machinery into which it is to be incorporated has been declared in conformity with the provisions of Directive 2006/42/EC on Machinery, where appropriate, and until the EC Declaration of Conformity according to Annex II A is issued.

(FR) Notice de montage dans le cadre de la directive européenne 2006/42/CE relative aux machines (annexe II B)
Nous expliquons ici que la machine incomplète décrite ci-après répond à toutes les exigences fondamentales de la directive relative aux machines 2006/42/CE, pour autant que cela soit possible dans le cadre du volume de livraison. Plus loin nous expliquons que les documents techniques spéciaux sont établis conformément à l'annexe VII partie B de cette directive. Pour ce qui est de notre service de documentation, nous nous engageons à communiquer aux autorités de surveillance du marché les explications fondées des documents spéciaux pour la machine incomplète. La machine incomplète doit d'abord être mise en service, quand il est constaté que la machine ou l'installation dans laquelle la machine incomplète doit être montée répond aux dispositions de la directive 2006/42/CE relative aux machines, et que la notice de conformité européenne est présentée conformément à l'annexe II A.

(ES) Declaración de incorporación según la Directiva 2006/42/CE sobre máquinas (Anexo II B)
Por la presente declaramos que la siguiente cuasi máquina cumple con todas las disposiciones pertinentes de la Directiva 2006/42/CE de máquinas, siempre y cuando lo permita el volumen de suministro. También declaramos que la documentación técnica descrita en el anexo VII parte B se ha elaborado conforme a la presente Directiva. Nos comprometemos a enviar los documentos de la cuasi máquina a las autoridades de vigilancia del mercado a través de nuestro departamento de documentación en respuesta a una previa solicitud motivada. La cuasi máquina no puede ponerse en servicio sin antes verificar que la máquina o el sistema en el que se instale la cuasi máquina, cumpla con las disposiciones de la Directiva 2006/42/CE de máquinas y con la declaración CE de conformidad según el anexo II A.

(PT) Declaração de Construção de acordo com a Directiva-CE 2006/42/CE de máquinas (Anexo II B)
Esclarecemos por meio deste que a máquina incompleta descrita a seguir segue os requerimentos da directiva de máquinas 2006/42/CE, contanto que sua utilização seja mantida dentro do escopo original. Esclarecemos ainda que a documentação técnica especial segue o disposto no Anexo VII Parte B de tal directiva. Comprometemo-nos a a cumprir com as exigências das autoridades de fiscalização que forem feitas a nosso departamento de documentação que estejam relacionadas a qualquer documentação da máquina incompleta. A máquina poderá ser colocada em operação, se necessário for, desde que seja verificado que o sistema ou a máquina na qual a máquina incompleta será instalada foi montada, em conformidade com a directiva 2006/42/CE de máquinas e com à declaração de conformidade 2006/42/CE.

Bezeichnung des Gerätes:	**Durchflusssensor**	Descripción de la mercancía:
Description of the unit:	**Flow meter**	Designação do aparelho:
Désignation du matériel:	**Capteur de débit**	
Typ / Type:	**FLOWCON LP 1 / LP 2**	

Die unvollständige Maschine entspricht allen Bestimmungen der Richtlinie(n):
The partly completed machine is in conformity with all requirements of the directive(s):

2006/42/EG **Maschinenrichtlinie** **Machinery Directive**

Folgende harmonisierte Normen wurden angewandt:
The following harmonised standards were applied:

-

Lucjan Gogolin
Leiter Dosiertechnik
Head of Dosing Department
Lutz-Jesco, Wedemark, 01.10.2013

Dokumentationsbevollmächtigter:
Authorized person for documentation:
Lucjan Gogolin
Adresse: siehe Adresse des Herstellers
Address: see manufacturer's address

Lutz-Jesco GmbH
Am Bostelberge 19
30900 Wedemark
Germany

© Lutz-Jesco GmbH 2015

9 Declaration of Harmlessness

Please copy the declaration, stick it to the outside of the packaging and return it with the device.

Declaration of no objection

Please fill out a separate form for each appliance!

We forward the following device for repairs:

Device and device type: ..... Part-no.:.....

Order No.:..... Date of delivery: .....

Reason for repair: .....

.....

.....

Dosing medium

Description: ..... Irritating: ☐ Yes ☐ No

Properties: ..... Corrosive: ☐ Yes ☐ No

We hereby certify, that the product has been cleaned thoroughly inside and outside before returning, that it is free from hazardous material (i.e. chemical, biological, toxic, flammable, and radioactive material) and that the lubricant has been drained.

If the manufacturer finds it necessary to carry out further cleaning work, we accept the charge will be made to us.

We assure that the aforementioned information is correct and complete and that the unit is dispatched according to the legal requirements.

Company / address:..... Phone:.....

..... Fax:.....

..... Email:.....

Customer No.:..... Contact person: .....

Date, Signature:.....

© Lutz-Jesco GmbH 2015
Subject to technical changes.
150616

10 Warranty Application

In the event of a repair, copy the warranty application and complete it separately for each unit. Enclose one copy to the unit you are sending. Please send the warranty application to us also in advance per fax or e-mail!

Warranty Application

Please copy and send it back with the unit!

If the device breaks down within the period of warranty, please return it in a cleaned condition with the complete warranty application, filled out.

Sender

Company: ..... Phone: ..... Date: .....

Address: .....

Contact person: .....

Manufacturer order no.: ..... Date of delivery: .....

Device type: ..... Serial number: .....

Nominal capacity / nominal pressure: .....

Description of fault: .....

.....

.....

.....

.....

.....

.....

.....

Service conditions of the device

Point of use / system designation: .....

.....

.....

Accessories used (suction line etc.): .....

.....

.....

.....

.....

Commissioning (date): .....

Duty period (approx. operating hours): .....

Please describe the specific installation and enclose a simple drawing or picture of the chemical feed system, showing materials of construction, diameters, lengths and heights of suction and discharge lines.

© Lutz-Jesco GmbH 2015

11 Index

A
Activate FLOWCON LP 1 13
Adjust to the viscosity of the metered medium 12
Adjust viscosity
..... 12
Assembly 11

B
Base 10

C
Commissioning FLOWCON LP 1 13
Configuring 13

D
Deactivate FLOWCON LP 1 13
Declaration of Harmlessness 17
Device revision 7
Dimensions 10
Disposal of old equipment 15

E
EC Declaration of Conformity 16

F
Function 8

G
General warnings 5

H
Hazards due to non-compliance with the safety instructions ... 5

I
Information about chlorine 5
Installation 11
Instructions for action
Identification of instructions for action 4
Intended purpose 7
Intended use 7

M
Maintenance 14

N
Notes for the Reader 4

O
Operation 13

P
Perform adjustment 14
Personal protective equipment 5
Personnel qualification 6
Personnel tasks 6
Product description 8
Product warranty 7
Protective Equipment 5

R
Rating plate 8

S
Safety 5
Scope of delivery 8
Set behaviour in the event of an error 13
Set faulty strokes 14
Signal words
Explanation of the signal words 4
Specialist staff 6
Storage 15

T
Technical data 9
Trained persons 6
Transportation 15

V
Venting 13

W
Wall holder 10
Warning signs
Explanations of the warning signs 4
Warnings
General warnings 5
Identification of warnings 4
Warranty Application 18
Working in a safety-conscious manner 5

© Lutz-Jesco GmbH 2015
Subject to technical changes.
150616