EASYPRO

Product information

Water sampling station for swimming pools

Reliable and individual
Designed to meet your every need, the EASYPRO system monitors and controls a range of water parameters in your swimming pool.

The TOPAX® MC multi-channel controller installed* in the EASYPRO subjects the water parameters to constant measurement, keeping them within the target range.
It enables you to control a large number of actuators and permits easy and intuitive operation. The multi-coloured LEDs provide an optical warning if the water parameters leave the target range. Automatic continuous recording of the water parameters and depiction of their development permit simple diagnosis.

General
- LED illumination of the fittings
- Monitoring and control of various water parameters
- Continual recording of the water parameters
- With cover
- Compact design
- Including TOPAX® MC multi-channel controller
- Individually-configurable system through modular structure
- Low water consumption
- Connector system for water connections

Scope of delivery
- Sample water line 10 m
- Sample water extraction
- buffer solution
- Mounting material for wall mounting

* Our standard versions are delivered with the TOPAX® MC multi-channel controller. Use the match code ordering system to order the EASYPRO water sampling stations without the TOPAX® MC.

safety is our concern

Technical data

EASYPRO			MB-C	ME-C	MC-C	MD-C	MP-C	MK-C	CS 2, 3, 4	MBB-C	MEE-C
Sample water requirement		l/h	30 approx.						45 approx.	2 x 30 approx.	
Sample water inflow and discharge		mm	PE hose 6/8 + stop valve with G1/4 connection								
Pressure resistance		bar	max. 6			max. 6, air gap required		max. 6	max. 6, air gap required	max. 6	
Pressure loss in the water sampling station		bar	0.3 approx.							2 x 0.3 approx.	
Mesh size sample water filter		µm	300								
Power supply			100 – 240 V AC, 50/60 Hz								
Power consumption		W	max. 20								
Analogue outputs for remote transmission			4 x 0/4 – 20 mA, working resistance max. 500 Ω								
Disturbance variable input		mA	0/4 – 20								
Interfaces			Ethernet TCP/IP or RS485 Modbus RTU (optional)								
Protection class			IP65 (electronic controller)								
Ambient temperature		°C	-5 to +45, no exposure to direct sunlight								
Control characteristic			P, PI, PID or PD behaviour, control direction selectable with disturbance variable feed forward, 2-side control selectable								
Measuring inputs (depending on version)											
Number of measuring inputs			2[a]		3[b]		4[c]	3[b]	2[a], 3[b], 4[c]	2 x 2[a]	
Free chlorine	Amperometric 3-electrode measuring cell with potentiostat (DMZ3.1)	mg/l	0 – 2 or 0 – 15[d, h]	-	0 – 2 or 0 – 15[d, h]	-	0 – 2 or 0 – 15[d, h]		-		
	Membrane-covered measuring cell	mg/l	-			0 – 10[e]	-				
	CS120 excess chlorine measuring cell	mg/l	-						0 – 10[d]	-	
Total chlorine	Membrane-covered measuring cell	mg/l	-				0 – 10[e]	-	0 – 10[e]	-	
pH value	pH single-rod measuring cell	pH	2 – 12[f] or 0 – 14[f]							2 x 2 – 12[f] or 2 x 0 – 14[f]	
Redox value	Redox single-rod measuring cell	mV	-	-1000 to +1000						-	2 x -1000 to +1000
Conductivity (conductive)	Conductivity measuring (k=1)	mS/cm	-					0 – 2[g], 0 – 20[g] or 0 – 100[g]		-	
Temperature	Pt100	°C	5 – 45							2 x 5 – 45	
Output modules (depending on version)											
Number of output modules			up to 4								
Servomotor relay			2 x 230 V AC, 5 A (ohmic load)								
		kΩ	Potentiometer feedback: 1 – 10								
Servomotor 20 mA			Constant 0/4 – 20 mA output								
			Servomotor with 20 mA feedback								
Relays			2 x 230 V AC, 5 A (ohmic load)								
Relay high current			2 x 230 V AC, 8 A (ohmic load)								
Optocoupler			2 x 80 V DC, 5 mA								

a) A temperature sensor can also be connected.
b) Additionally, up to two temperature sensors can be connected.
c) Additionally, up to three temperature sensors can be connected.
d) Dependant on the measuring cell transconductance.
e) Dependant on the measuring cell.
f) Dependant on the single-rod measuring cell
g) Dependant on the configuration, corresponds to approx. 0 – 1 % or 0 – 5 % salt content)
h) Dependant on the input module.

Dimensions

All dimensions in mm

EASYPRO MB-C & ME-C
with 5" display

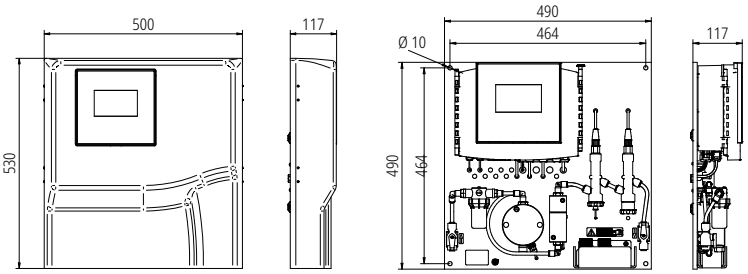

EASYPRO MC-C, MD-C, MP-C & MK-C
with 7" display

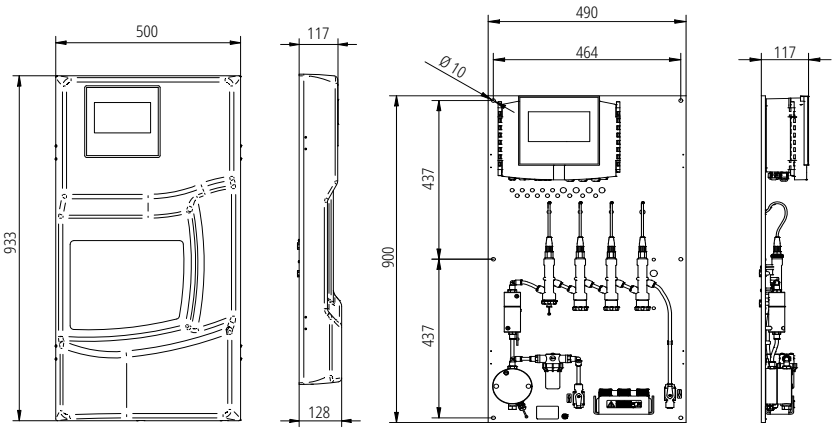

EASYPRO CS 2, 3 & 4
with 5" display (CS 2) or with 7" display (CS 3 & 4)

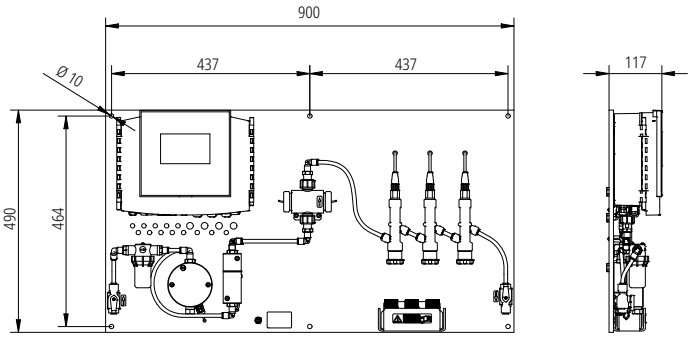

EASYPRO MBB-C & MEE-C
with 5" display

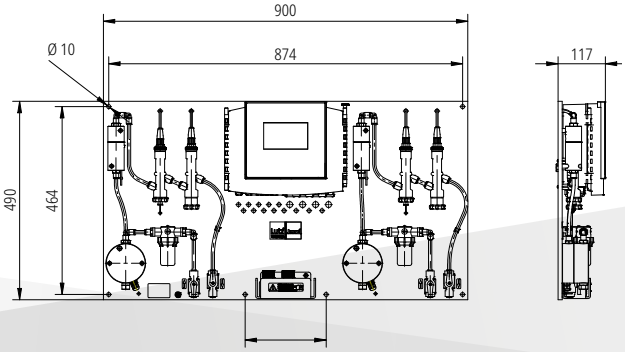

Accessories

Photometer
- Internal memory for 16 data sets
- Automatic switch off
- Real-time clock and date
- Adjustable functional display
- Illuminated display
- Water-tight (analogue IP68, 1 hour at 0.1 metre)

Buffer solutions
- pH value: pH 6.80 and 9.27
- Redox value: 468 mV
- Conductivity: 12.88 mS/cm and 50 mS/cm

Switching device suppression module
- -20 to +70 °C
- 22 × 27 × 11 mm
- 50 W (VA)

TopView 4 visualisation software
- Visualisation and monitoring of the EASYPRO water sampling station
- Retrieval and display of data from the browser for up to 10 users with user-specific view configurations
- Pre-installed TopView license and operating system on an energy-saving microcomputer
- Connection to controller via Modbus TCP network
- Simple configuration and remote access via LAN/WLAN
- Secure connection through VPN and https
- Archiving of all alarms issued and all measured values
- Automatic daily log
- Operating log (optional)

Order no. PI-42800EN | State of the art 09.2024 | Subject to technical changes

Follow us:

Lutz-Jesco GmbH
Am Bostelberge 19 | DE-30900 Wedemark | Telephone +49 5130 5802-0 | info@lutz-jesco.com | www.lutz-jesco.com