Safe mobile emergency chlorination

SAFETYCHLORMIX – Simple & easy production of a hypochlorite solution for the disinfection of drinking water

A clever alternative to the stationary solution

The no. 1 priority for drinking water suppliers is the uninterrupted supply of drinking water which satisfies the legal quality requirements.

Emergency chlorine supply units are required to avoid contamination of the drinking water following accidents or catastrophes, thereby permitting an uninterrupted water supply.

Lutz-Jesco has developed a mobile emergency chlorine supply unit for a range of systems and procedures subject to the risk of outage, which stores the disinfectant in a stable fashion.

To prevent microbial contamination, the mobile emergency chlorine supply unit can also be used for disinfection during the commissioning of newly-installed lines and units and after repairs of longer standstill times.

Safe production of the hypochlorite solution

The CHC dosing station SAFETYCHLORMIX is a new and safe unit for the production of a hypochlorite solution. The calcium hypochlorite (CHC) in accordance with DIN EN 900 (available as granulate in packages of 25 l or 60 l) is dissolved directly in the water and then led to the drinking water via a special dosing pump.

This means that the dry granulate can be stored without any restrictions. The ready-to-dose hypochlorite solution should be used within six months.

Easy handling

The SAFETYCHLORMIX operating principle makes the CHC granulate especially safe and easy to handle. The hypochlorite solution is produced dust-free directly in the delivery package without necessitating any human contact with the irritant substance. The hypochlorite solution is pumped from the packaging via a suction line connected to an air mixer. This produces and even and permanent supply of the solution. A large proportion of the low-soluble contents remains in the packaging so that the dosing medium is largely free of suspended load.

A pump from the tried and tested MAGDOS series ensures precise dosing of the disinfectant in the process water. This can be controlled directly via a measurement and control application such as the TOPAX controller or a flow meter.

At a glance

- Simple and safe handling of the calcium hypochlorite
- Exact chlorine concentration setting
- Low investment and space requirements
- No refilling and turning over of the packaging required
- Delivery package with 25l and 60l volumes available
- Packaging with UN approval for calcium hypochlorite
- Calcium hypochlorite of the highest quality
- Long-term storage stability
- The greatest proportion of the insoluble constituents remain in the packaging
- Only very low chlorate development, even with unfavourable storage conditions
- Complies with all the minimum requirements of the technical regulations

Technical data

SAFETYCHLORMIX		05	1	2	4	6	10	15
Chlorine performance with max. back pressure	g/h	18	38	95	170	310	450	650
Chlorine concentration	g/l	50 approx.						
Max. delivery pressure	bar	16	16	16	16	8	6	3
Delivery capacity at max. backpressure	l/h	0.36	0.76	1.9	3.4	6.2	9.0	13.0
Delivery capacity at average backpressure	l/h	0.54	1.1	2.3	3.8	6.8	10.0	15.3
Power consumption	W	8	13	19	25			
Voltage supply		230 V AC 50 Hz						
Protection class		IP65						
Ambient temperature	°C	5 – 40						
Max. media temperature	°C	35						
Adjustable dosing range	%	0 – 100						

Dimensions

All dimensions in millimetres (mm).

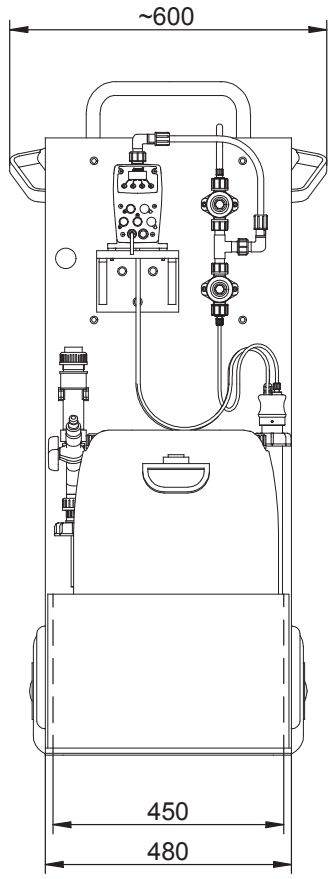

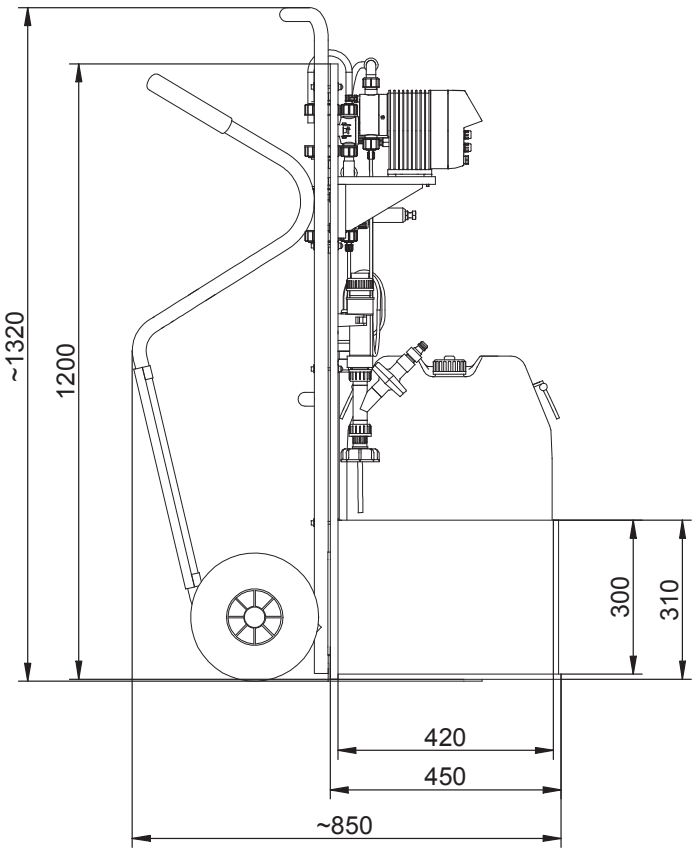

Structure of the dosing station

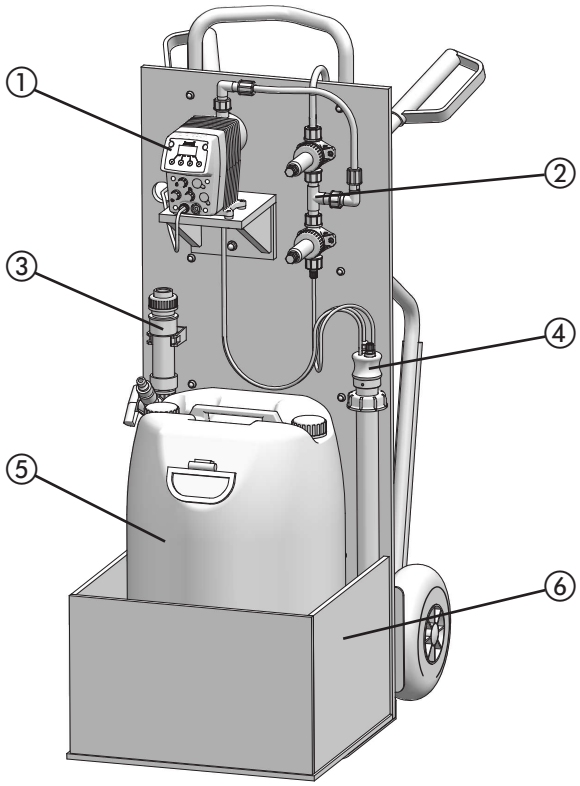

Item	Description
①	MAGDOS LDp dosing pump
②	Back-pressure and pressure relief valve
③	Filler unit
④	GF-2 suction line
⑤	Delivery package
⑥	Collecting pan

Scope of delivery

SAFETYCHLORMIX is delivered assembled together with the following modules on a transport trolley:

- Solenoid Diaphragm Dosing Pump MAGDOS LDp
- Back-pressure valve
- Pressure-relief valve
- Injection nozzle SKD
- Pump bracket
- Collecting pan
- Hose (PVC web-reinforced, 6/12 mm, 10 m long)
- Set of warning signs
- Filler unit with shutoff valve and adsorption unit
- GF-2 suction line
- Operating instructions of the dosing station
- Operating instructions of the components

Accessories

Description	Part No.
PVC hose	
■ 4/6 mm	97181
■ 6/12 mm	97120
Connection for filler unit	
■ fitting for a 25 litre delivery package	41428
■ fitting for a 60 litre delivery package	41429
Connector G1/2“ (ext. Water connection)	41415
Flexible elbow connection G1/2“ (ext. Water connection)	88860
Injection nozzle cpl. 6/12	12300366
Back-pressure and pressure-relief valve set PN16	12600052
Suction line PVC	
■ 460 mm for 25 l package	12200982
■ 630 mm for 60 l package	12200983
Calcium hypochlorite granulate	
■ 25 l package	97934
■ 60 l package	97935
Chemicals protective equipment	19800021

Average chlorine requirement, service life of the delivery package

Drinking water disinfection	Capacity	Chlorine requirement 1.2 mg/l	Packaging size / time per packaging	Chlorine requirement 0.3 mg/l	Packaging size / time per packaging
Building supply	5 m³/h	6g = 0,12 l/h	25 l = 208 h	1,5 g = 0,03 l/h	25 l = 833 h
Water distribution	50 m³/h	60 g = 1,20 l/h	60 l = 50 h	15 g = 0,30 l/h	25 l = 83 h
Small water works	120 m³/h	144 g = 2,88 l/h	60 l = 21 h	36 g = 0,72 l/h	25 l = 35 h
Water works	250 m³/h	300 g = 6,00 l/h	60 l = 10 h	75 g = 1,50 l/h	60 l = 40 h

SAFETYCHLORMIX systems selection table

Dosing pump	Rated dosing output At max. back pressure	Suited for a max. delivery rate of:	
		With a dosing quantity 1.2g/m³ in m³/h	With a dosing quantity 0.3 g/m³ in m³/h
LDp 05	0.36 l/h (0.050 ml/stroke)	15	60
LDp 1	0.76 l/h (0.050 ml/stroke)	32	127
LDp 2	1.90 l/h (0.200 ml/stroke)	79	317
LDp 4	3.40 l/h (0.310 ml/stroke)	142	567
LDp 6	6.20 l/h (0.570 ml/stroke)	258	1033
LDp 10	9.00 l/h (0.830 ml/stroke)	375	1500
LDp 15	13.00 l/h (0.860 ml/stroke)	542	2167

MAGDOS LDp delivery characteristic curve

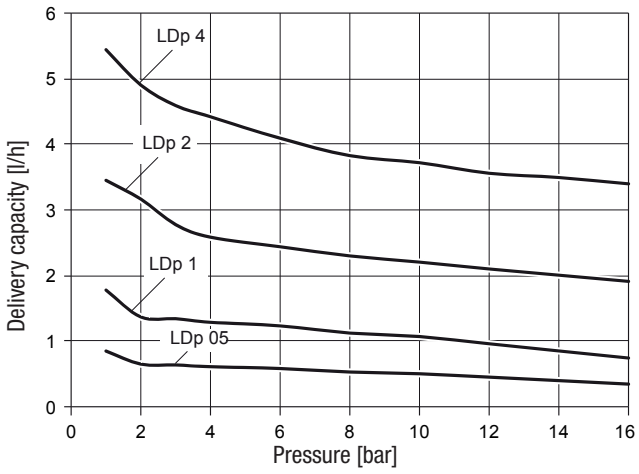

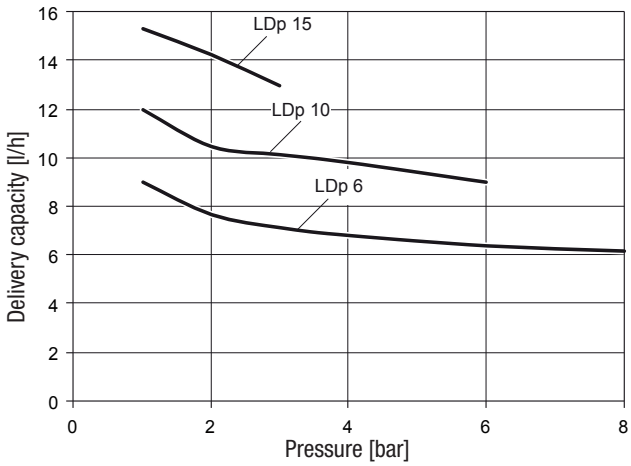

PI-65110-02-V01 | Copyright 05.2016 by Lutz-Jesco GmbH
Subject to technical changes

Lutz-Jesco GmbH
Am Bostelberge 19
30900 Wedemark
Phone: +49 5130 5802-0
Fax: +49 5130 580268
E-mail: info@lutz-jesco.com
Website: www.lutz-jesco.com