CHC dosing station
SAFETYCHLORMIX
Operating instructions

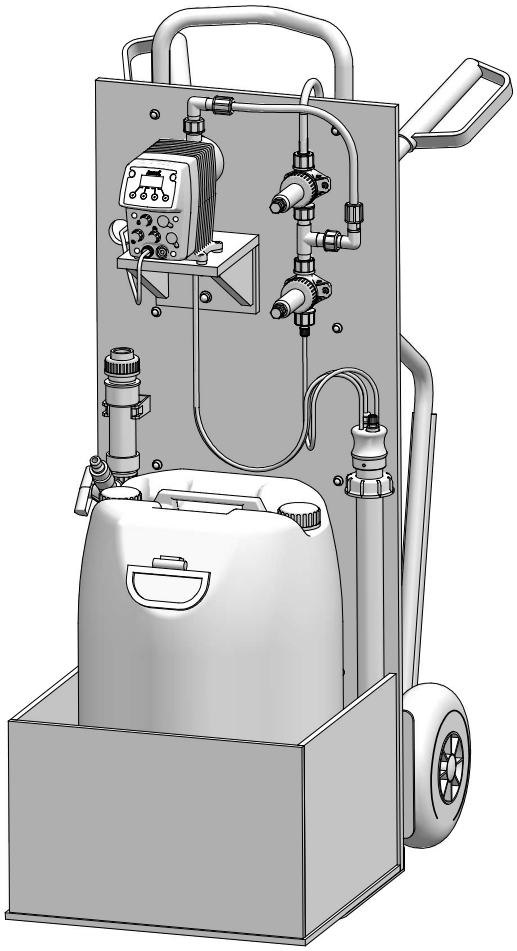

Read the operating manual!

The user is responsible for installation and operation related mistakes!

Original operating instructions

© Lutz-Jesco GmbH 2016

BA-65110-02-V01

Dosing Conveying Control | Liquids Gases Systems

Table of Contents

1 Notes for the Reader 4
1.1 General non-discrimination 4
1.2 Explanation of the signal words 4
1.3 Explanation of the warning signs 4
1.4 Identification of warnings 4
1.5 Instruction for action identification 5

2 Safety 6
2.1 General warnings 6
2.2 Hazards due to non-compliance with the safety instructions 7
2.3 Working in a safety-conscious manner 7
2.4 Personal protective equipment 7
2.5 Personnel qualification 7

3 Intended use 8
3.1 Notes on product warranty 8
3.2 Intended purpose 8
3.3 Principles 8
3.4 Foreseeable misuse 8

4 Product description 10
4.1 Scope of delivery 10
4.2 Function description 10
4.3 Structure of the dosing station 10

5 Technical data 11
5.1 Performance data and operating conditions 11

6 Dimensions 12
6.1 Dimensions 12
6.2 Dimensions of the package 12

7 Installation 13
7.1 Set up information 13
7.2 Installing the components 13
7.3 Installing the injection nozzle 13
7.4 Installing the dosing station 14
7.5 Setting the dosing pump 14

8 Operation 15
8.1 Commissioning the dosing station 15

9 Shutdown 16
9.1 Long-term shutdown 16
9.2 Storage 16

10 Maintenance 17
10.1 Maintenance intervals 17

11 Troubleshooting 18
11.1 Type of fault 18

12 Disposal 20
12.1 Disposing of the dosing station 20
12.2 Disposal of the delivery package 20

13 Spare parts and Accessories 21
13.1 Spare parts 21
13.2 Accessories 21

14 Declaration of no objection 22

15 Warranty claim 23

16 EC Declaration of Conformity 24

17 Index 25

© Lutz-Jesco GmbH 2016
Subject to technical changes.
160519

1 Notes for the Reader

These operating instructions contain information and behaviour rules for safe and designated operation of the mobile calcium hypochlorite (CHC) dosing station SAFETYCHLORMIX.

Observe the following principles:

- Read the entire operating manual prior to starting-up the system
- Ensure that everyone who works with or on the dosing station has read the operating instructions and follows them.
- Keep the operating instructions for the entire service life of the system.
- Pass on the operating instructions to any subsequent owner of the system.

1.1 General non-discrimination

In this operating manual, only the male gender is used where grammar allows gender allocation. The purpose of this is to make the text easy to read. Men and women are always referred to equally. We would like to ask female readers for understanding of this text simplification.

1.2 Explanation of the signal words

Different signal words in combination with warning signs are used in this operating manual. Signal words illustrate the gravity of possible injuries if the risk is ignored:

Signal word	Meaning
DANGER!	Refers to imminent danger. Ignoring this sign may lead to death or the most serious injuries.
WARNING!!	Refers to a potentially hazardous situation. Failure to follow this instruction may lead to death or severe injuries.
CAUTION	Refers to a potentially hazardous situation. Failure to follow this instruction may lead to minor injury or damage to property.
Note	Refers to a danger which, if ignored, may lead to risk to the machine and its function.

Table 1: Explanation of the signal words

1.3 Explanation of the warning signs

Warning signs represent the type and source of a danger:

Warning sign	Type of danger
	General danger zone
	Danger of electric shock
	Danger of caustic or other burns
	Danger of explosions
	Danger of automatic start up
	Danger of electromagnetic radiation
	Danger of damage to machine or functional influences

Table 2: Explanation of the warning signs

1.4 Identification of warnings

Warnings are intended to help you recognise risks and avoid negative consequences.

This is how warnings are identified:

Warning sign	SIGNAL WORD
Description of danger. Consequences if ignored. ⇨ The arrow signals a safety precaution to be taken to eliminate the danger.	

© Lutz-Jesco GmbH 2016

1.5 Instruction for action identification

This is how pre-conditions for action are identified:

✓ Pre-condition for action which must be met before taking action.

This is how instructions for action are identified:

➔ Separate step with no follow-up action.

1. First step in a series of steps.
2. Second step in a series of steps.

▸ Result of the above action.

✓ **Action completed, aim achieved.**

© Lutz-Jesco GmbH 2016
Subject to technical changes.

2 Safety

2.1 General warnings

The following warnings are intended to help you to eliminate the dangers that can arise while handling the system. Risk prevention measures always apply regardless of any specific action.

Safety instructions warning against risks arising from specific activities or situations can be found in the respective sub-chapters.

DANGER!

Mortal danger from electric shock!

Wrongly connected or located cables or damaged ones can injure you.

- ⇨ Connect the device only to a SCHUKO socket outlet protected by a ground fault circuit interrupter (GFCI).
- ⇨ Replace damaged cables without delay.
- ⇨ Do not use extension cables.
- ⇨ Do not bury cables.
- ⇨ Secure cables to avoid being damaged by other equipment.

DANGER!

Danger to life through explosions!

When using dosing devices without ATEX certification in a potentially explosive area, explosions can occur that result in fatal injuries.

- ⇨ Never use the dosing station SAFETYCHLORMIX in potentially explosive areas.

WARNING!!

Uncontrolled development of hazardous substances!
Non-designated use of the dosing station can result in the uncontrolled development of hazardous substances. The calcium hypochlorite intended for use may only be dissolved in water of drinking water quality.

- ⇨ Use exclusively water of drinking water quality to fill the delivery package.

WARNING!!

Caustic burns or other burns through dosing media!

After connecting to the voltage supply and when working on the dosing pump, valves and connections, dosing medium residue can be emitted from the dosing head.

- ⇨ Before connecting the mains supply, connect the dosing lines.
- ⇨ Check that all the screw connections have been tightened correctly and are leak-proof.
- ⇨ Use sufficient personal protective equipment.
- ⇨ Rinse the dosing station with a liquid (e.g. water) which does not pose any risk.
- ⇨ Release pressure in hydraulic parts.
- ⇨ Never look into open ends of plugged pipelines and valves.

CAUTION

Increased risk of accidents due to insufficient qualification of personnel!

The dosing station may only be installed, operated and maintained by personnel with sufficient qualifications. Insufficient qualification will increase the risk of accidents.

- ⇨ Ensure that all action is taken only by personnel with sufficient and corresponding qualifications.
- ⇨ Prevent access to the system for unauthorised persons.

Note

Comply with the component documentation.

Knowledge of all the component documentation is required for the safe installation, start-up and use of the dosing station.

- ⇨ Read and comply with the documentation of the individual components.

Note

Water residue in the components.

A number of the components of the dosing station are checked for their correct function before they are dispatched. This means that water residue can be present in the components during the first installation. This residue is entirely harmless and does not compromise the start-up.

© Lutz-Jesco GmbH 2016

2.2 Hazards due to non-compliance with the safety instructions

Failure to follow the safety instructions may endanger not only persons, but also the environment and the device.

The specific consequences can be:

- Failure of vital functions of the dosing pump and the system,
- failure of required maintenance and repair methods,
- danger for individuals through dangerous dosing media,
- danger to the environment caused by release of substances from the system.

2.3 Working in a safety-conscious manner

Besides the safety instructions specified in this operating manual, further safety rules apply and must be followed:

- Accident prevention regulations,
- safety and operating provisions,
- safety regulations on handling hazardous substances,
- standards and legislation.

2.4 Personal protective equipment

Based on the degree of risk posed by the dosing medium and the type of work you are carrying out, you must use corresponding protective equipment. Information regarding the protective equipment required is provided in the regulations of the insurance provider, generally-accepted technical regulations, the operating instructions and the safety data sheets of the dosing medium.

As a minimum, the following protective equipment is recommended:

Protective clothing

Protective gloves

Goggles

Safety shoes

Corresponding protective equipment must be used during these tasks:

- Commissioning
- Operation
- Shutdown
- Maintenance
- Disposal

2.5 Personnel qualification

Any personnel who work on the system must be in possession of the appropriate special knowledge and skills.

Anybody who works on the system must meet the following conditions:

- Personal suitability for the respective activity,
- sufficient qualification for the respective activity,
- training in handling of the system,
- knowledge of safety equipment and the way this equipment functions,
- knowledge of this operating manual, particularly of safety instructions and sections relevant for the activity,
- knowledge of fundamental regulations regarding health and safety and accident prevention.

All persons must generally have the following minimum qualification:

- Training as specialists to work unsupervised on the system,
- with sufficient training to enable them to work on the dosing station under the supervision of a trained specialist. These operating instructions differentiate between two user groups:

2.5.1 Qualified persons

A qualified person is someone whose professional training, knowledge, experience and knowledge of the relevant specifications, is able to perform the job allocated to them and recognise and/or eliminate any possible dangers by themselves.

2.5.2 Trained persons

Trained persons have received training from the operator about the tasks they are to perform and about the dangers stemming from improper behaviour.

In the table below, you can check what personnel qualifications are required for the respective tasks. Only people with appropriate qualifications are allowed to perform these tasks!

Qualification	Activities
Qualified persons	■ Assembly ■ Hydraulic installation ■ Electric installation ■ Commissioning ■ Taking out of operation ■ Maintenance ■ Repairs ■ Disposal ■ Fault rectification
Trained persons	■ Storage ■ Transportation ■ Control ■ Taking out of operation ■ Maintenance ■ Fault rectification

Table 3: Personnel qualification

© Lutz-Jesco GmbH 2016
Subject to technical changes.
160519

3 Intended use

3.1 Notes on product warranty

Any non-designated use of the product can compromise its function or intended protection. This leads to invalidation of any warranty claims!

Please note that liability is on the side of the user in the following cases:

- The dosing station is operated in a fashion which does not accord with these operating instructions,
- if people operate the product who are not adequately qualified to carry out their respective activities,
- no original Lutz-Jesco GmbH delivery packages are used,
- no original spare parts or accessories of Lutz-Jesco GmbH are used.
- unauthorised alterations are made to the system.
- the user uses different dosing media than those indicated in the order,
- the user does not use dosing media under the conditions agreed with the manufacturer such as modified concentration, density, temperature, contamination, etc.

3.2 Intended purpose

The dosing station SAFETYCHLORMIX is intended for the following purpose: Local production and dosing of calcium hypochlorite in water.

Other dosing media are not permitted.

3.3 Principles

- Before delivery, the manufacturer inspected the dosing station and operated it under specific conditions (with a specific dosing medium with a specific density and temperature, with specific pipe dimensions, etc.). Since these conditions differ at every location of usage, the delivery capacity of the dosing pump should be measured by gauging it at the operating company's installation.
- Comply with the information regarding the operating and environmental conditions (see chapter 5 „Technical data“ on page 11).
- Any restrictions regarding the viscosity, temperature and density of dosing media must be followed. You must only use dosing media at temperatures above freezing point or below the boiling point of the respective medium.
- The materials of the components and hydraulic parts of the system must be suitable for the dosing medium that is used. In this connection, note that the resistance of these components can change in dependence on the temperature of the media and the operating pressure.

> Information on the suitability of materials combined with different dosing media can be found in the Compatibility Chart of Lutz-Jesco GmbH.
> The information in this resistance list is based on information from the material manufacturers and on expertise obtained by Lutz-Jesco from handling the materials.
> As the durability of the materials depends on many factors, this list only constitutes initial guidance on selecting material. In all cases, test the equipment with the chemicals you use under operating conditions.

- The dosing station is not intended for outdoor use unless appropriate protective measures have been taken.
- Avoid leaks of liquids and dust into the casing and avoid direct exposure to sunlight.
- You must never operate dosing pumps in a potentially explosive atmosphere if they do not have corresponding nameplates or an appropriate EC Declaration of Conformity for potentially explosive atmospheres.

3.4 Foreseeable misuse

Below, there is information about the applications of the dosing station or associated equipment that are not considered to be intended use. This section is intended to allow you to detect possible misuse in advance and to avoid it.

Foreseeable misuse is assigned to the individual stages of the product lifetime:

3.4.1 Incorrect assembly

- Unstable or unsuitable installation surface for the system.
- Incorrect installation of the injection nozzle

3.4.2 Incorrect hydraulic installation

- Unsuitable connection of the pipes due to wrong material or unsuitable connections.
- Damage to threads due to them being tightened too much
- Excessive demand due to the pressure differences between the suction and discharge valves
- Exceeding the admissible pressure on the suction and discharge sides
- Using damaged parts

3.4.3 Incorrect electrical installation

- Connecting the mains voltage without a protective earth
- Unsecured mains or one that does not conform to standards
- Not possible to immediately or easily disconnect the power supply
- Wrong connecting cables for mains voltage
- Protective earth removed

3.4.4 Incorrect start-up

- Start-up with damaged system
- Shutoff valve closed upon start-up
- Closed suction or pressure line, e.g. due to blockages
- Personnel was not informed before the start-up
- System was recommissioned after maintenance without all the protective equipment and fixtures, etc. being reconnected.
- Inadequate protective clothing or none at all

3.4.5 Incorrect operation

- Protective equipment not functioning correctly or dismantled
- Modification of the dosing station without authority
- Ignoring operational disturbances

© Lutz-Jesco GmbH 2016

- Elimination of operational disturbances by personnel without adequate qualifications
- Bridging the external fuse
- Operation made more difficult due to inadequate lighting or machines that are difficult to access
- Operation not possible due to dirty or illegible display of the dosing pump
- Delivery of dosing media for which the dosing station is not designed
- Inadequate protective clothing or none at all

3.4.6 Incorrect maintenance

- Carrying out maintenance during ongoing operation
- Carrying out work that is not described in the operating manual
- No adequate or regular inspection of correct functioning
- No replacement of damaged parts or cables with inadequate insulation
- No securing against reactivation during maintenance work
- Using cleaning materials that can cause reactions with the dosing media
- Inadequate cleaning of the system
- Unsuitable purging medium
- Unsuitable cleaning materials
- Detergents left in system parts
- Using unsuitable cleaning equipment
- Using the wrong spares or lubricants
- Contaminating the dosing medium with lubricant
- Installing spare parts without following the instructions in the operating manual
- Pulling off sections of the plant
- Mixing up the valves
- Not reconnecting all the lines
- Damaging or not installing all the seals
- Not renewing seals
- Not paying attention to safety data sheets
- Inadequate protective clothing or none at all

3.4.7 Incorrect decommissioning

- Not completely removing the dosing medium
- Dismantling lines while the dosing pump is running
- Device not disconnected from the power supply
- Using the wrong dismantling tools
- Inadequate protective clothing or none at all

3.4.8 Incorrect disposal

- Incorrect disposal of dosing media, operating resources and other materials
- No labelling of hazardous substances

© Lutz-Jesco GmbH 2016
Subject to technical changes.
160519

4 Product description

4.1 Scope of delivery

Please compare the delivery note with the scope of delivery. The following items are part of the scope of delivery:

- Solenoid Diaphragm Dosing Pump MAGDOS LDp
- Back-pressure valve
- Pressure-relief valve
- Injection nozzle SKD
- Pump bracket
- Collecting pan
- Hose (PVC web-reinforced, 6/12 mm, 10 m long)
- Set of warning signs
- Filler unit with shutoff valve and adsorption unit
- GF-2 suction line
- Operating instructions of the dosing station
- Operating instructions of the components

4.2 Function description

Calcium hypochlorite (CHC) is predominantly used in water treatment as a disinfectant. Conventional dosing stations for calcium hypochlorite are fitted with various chamber or solvent systems before the dosing-ready solution can be used as a dosing medium. The filling procedure with granulate represents a particular hazard.
The CHC dosing station SAFETYCHLORMIX is delivered with a special delivery package with a capacity of 25 or 60 litres.
The solution is constantly stirred using a modified air mixer which presses air into the delivery package via the suction line; it is maintained in solution. This dosing medium can be controlled with the dosing pump MAGDOS LDp or dosed into the water using a pre-set dosing volume flow. The dosing can be controlled via measurement and control technology or a flow meter.

4.3 Structure of the dosing station

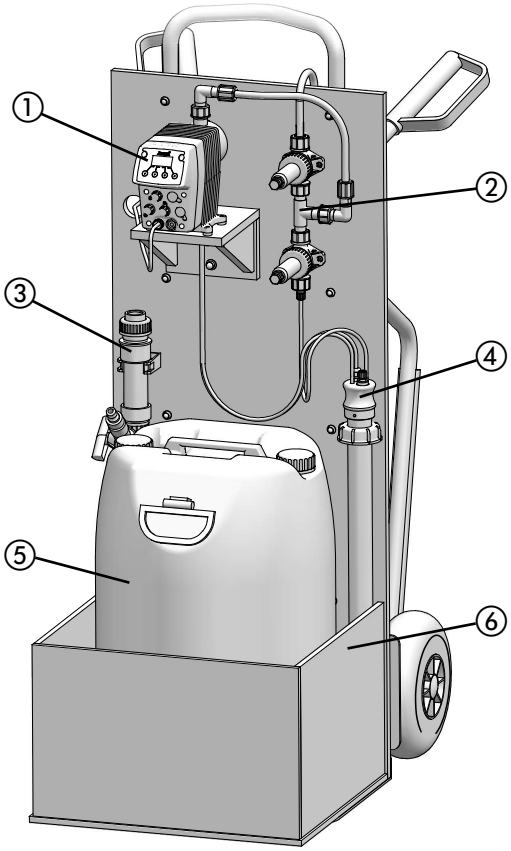

Fig. 1: Overview of the dosing station SAFETYCHLORMIX

Item	Description
①	MAGDOS LDp dosing pump
②	Back-pressure and pressure relief valve
③	Filler unit
④	GF-2 suction line
⑤	Delivery package
⑥	Collecting pan

Table 4: Position numbers

© Lutz-Jesco GmbH 2016

5 Technical data

5.1 Performance data and operating conditions

Please note that some of this data only represents guide values. The actual capacity of a dosing station depends on various factors. Approximate values for the delivery capacity under different pressures are specified in the operating instructions of the MAGDOS LDp dosing pump.

SAFETYCHLORMIX		SAFETYCHLORMIX-sizes						
		05	1	2	4	6	10	15
Chlorine performance with max. back pressure	g/h	18	38	95	170	310	450	650
Chlorine concentration	g/l	50						
Max. delivery pressure	bar	16	16	16	16	8	6	3
Delivery capacity at max. backpressure	l/h	0.36	0.76	1.9	3.4	6.2	9.0	13.0
Delivery capacity at average backpressure	l/h	0.54	1.1	2.3	3.8	6.8	10.0	15.3
Power consumption	W	8	13	19	25			
Voltage supply		230 V AC 50 Hz						
Protection class		IP65						
Max. ambient temperature*	°C	5 – 40						
Max. temperature of the medium	°C	35						
Adjustable dosing range	%	0 – 100						
Weight (overall system)	kg	23						

Table 5: Output data

* Use of the dosing pump at ambient temperatures below 5 °C must be checked individually. In such cases, please contact the manufacturer.

© Lutz-Jesco GmbH 2016
Subject to technical changes.
160519

6 Dimensions

All dimensions in millimetres (mm).

6.1 Dimensions

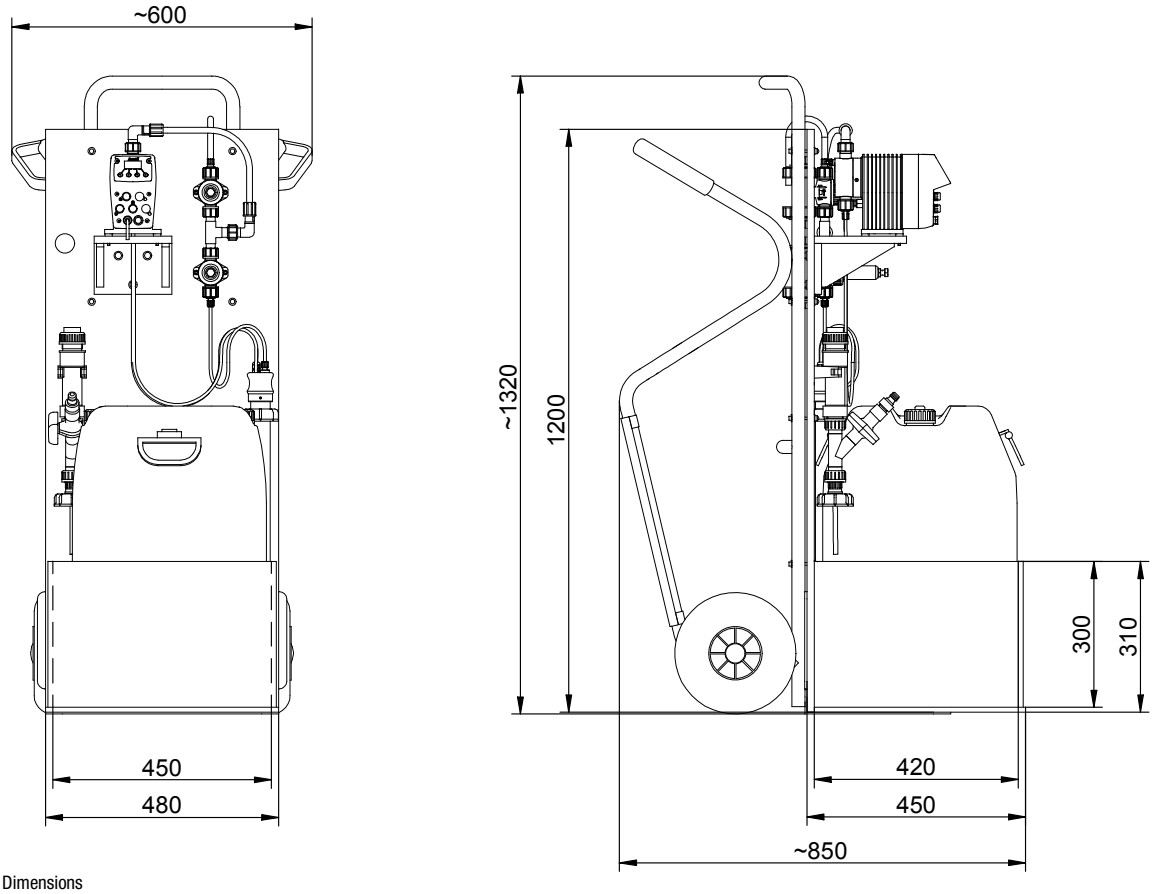

Fig. 2: Dimensions

6.2 Dimensions of the package

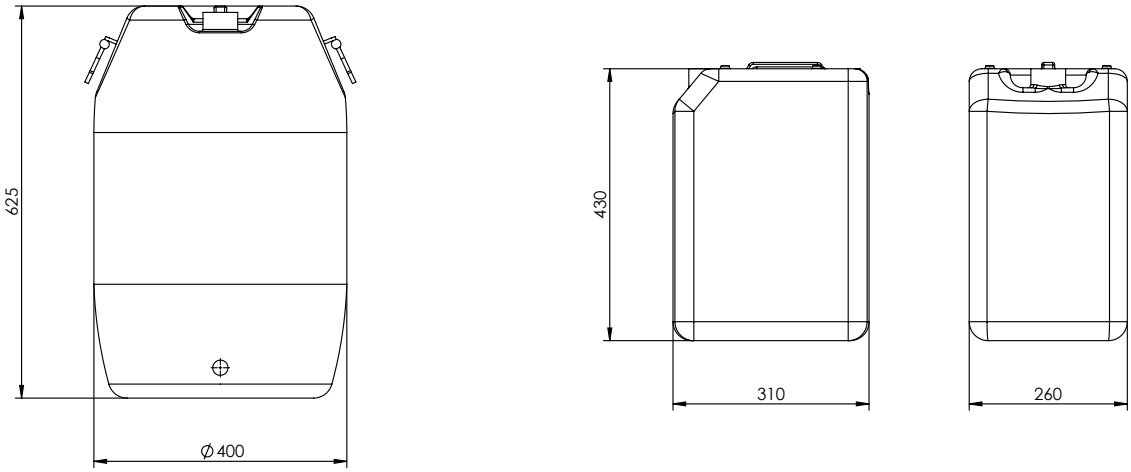

Fig. 3: Dimensions of the packaging (60 l and 25 l)

© Lutz-Jesco GmbH 2016

7 Installation

DANGER!

Mortal danger from electric shock!

Electrically conductive liquid can enter pump housings, cable screw connections and mains connectors.

⇨ Make sure that all components satisfy at least the requirements of protection class IP 65.

⇨ Always set up the system so that water cannot penetrate the housing of the dosing pump.

CAUTION

Danger of personal injury and material damage!

Hazardous situations can develop during the installation of the dosing station, their components or accessories, especially resulting from disasters or heavy weights.

⇨ Only ever perform the installation with a number of people.

⇨ If necessary, use external lifting gear during installation.

7.1 Set up information

When installing, follow the basic principles below:

- Select a firm and stable location for the dosing station.
- The maximum ambient temperature and that of the dosing medium must be complied with in accordance with chapter 5 „Technical data“ on page 11.
- Avoid direct sunlight.
- The dosing station is not intended for use out of doors unless appropriate protective measures have been taken to prevent dust and water from entering the pump housing.
- Protect the electrical connection against humidity.

7.2 Installing the components

Your CHC dosing station SAFETYCHLORMIX is delivered completely pre-fitted; only the dosing line must be assembled in the water-conducting system. This chapter highlights the individual components which require additional action and points to the further information contained in the component documentation.

Pre-conditions for actions:

✓ All component documentation is available.

✓ The scope of delivery was checked and corresponds to the specifications set out in chapter 4.1 „Scope of delivery“ on page 10.

✓ The personal protective equipment corresponds to the specifications contained in chapter 2.4 „Personal protective equipment“ on page 7.

Perform the following working steps:

1. Install the dosing station at a stable and suitable location.
2. Position the delivery package (pos. 5) in the collecting pan.
3. Open the 24x3 or the K60x6 seal and install the filler unit in accordance with the specifications of the operating instructions of the filler unit.
4. Open the second seal of the delivery package and install the suction line GF-2 (pos. 4) in accordance with the instructions in the operating instructions of the PVC suction line GF-2.
5. Install the injection nozzle SKD in accordance with chapter 7.3 „Installing the injection nozzle“ on page 13.
6. Mark the lines with the arrow markers included.

✓ **The dosing station was installed successfully.**

7.3 Installing the injection nozzle

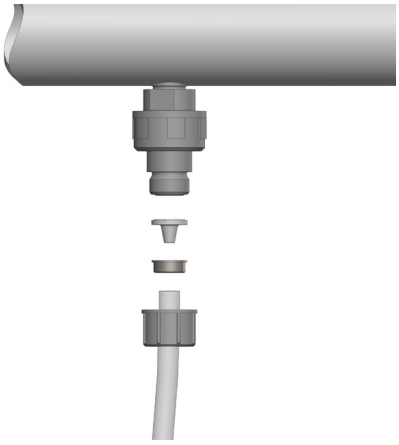

Fig. 4: Exploded diagram of the injection nozzle

This chapter describes the installation of the injection nozzle on the dosing pump.

Pre-conditions for actions:

✓ The chapter 7.2 „Installing the components“ on page 13 was concluded successfully.

✓ The following operating instructions are available: MAGDOS LDp.

✓ A connection hose is available.

Perform the following working steps:

1. Connect the connection hose with the back-pressure valve connection nozzle and tighten the union nut by hand.
2. Connect the connection hose to the injection nozzle.
3. Install the injection nozzle in your external line system.
   You can support the mixing by placing the discharge opening of the injection nozzle in the centre of the line.

✓ **The injection nozzle was successfully installed in the dosing station and the line system.**

© Lutz-Jesco GmbH 2016
Subject to technical changes.
160519

7.4 Installing the dosing station

This chapter describes the connection of the dosing station to an external water and power supply.

Pre-conditions for actions:

- ✓ The hose connections to the dosing pump are held as short as possible.
- ✓ The following operating instructions are available: Filler unit, MAGDOS LDp.
- ✓ All hose connections are free and the throughflow is ensured.
- ✓ Loops are avoided to prevent the development of gas bubbles

Perform the following working steps:

1. Ensure that the filler unit shutoff valve has been closed and connect the filler unit to an external water line.
2. Ensure that all components of the dosing station have been installed correctly and connect the dosing pump power cable to the external power supply.

✓ **The dosing station has been installed successfully and is ready for operation.**

7.5 Setting the dosing pump

Further information regarding the setting of the dosing pump MAGDOS LDp is provided in the separate operating instructions.

© Lutz-Jesco GmbH 2016

8 Operation

WARNING!!

Chemical burns or other burns through dosing medium!

While working on the dosing head, valves and connections, you may come into contact with dosing media. Dosing medium residue can be emitted from the dosing head after connecting to the voltage supply

- ⇨ Use sufficient personal protective equipment.
- ⇨ Before connecting the mains supply, connect the dosing lines.
- ⇨ Check that all the screw connections have been tightened correctly and are leak-proof.
- ⇨ Rinse the dosing station with a liquid (e.g. water) which does not pose any risk. Ensure that the liquid is compatible with the dosing medium.
- ⇨ Never look into open ends of plugged pipelines and valves.

CAUTION

Danger of personal injury and material damage!

Dosing medium can escape if you loosen connections on the dosing head (e.g. for venting) during operation.

- ⇨ Comply with the specifications in the safety data sheet of the calcium hypochlorite.
- ⇨ Clean the dosing station if dosing medium escapes.
- ⇨ Dispose of the dosing medium correctly.

CAUTION

Danger of automatic start up!

The dosing pump does not have an ON/OFF switch and may start to pump as soon as it is connected to the external power supply. This means that dosing medium can escape. Depending on the type and hazardousness of the dosing medium, this can result in injury.

- ⇨ Stop the dosing pump before disconnecting it from the mains supply.
- ⇨ Ensure that the dosing pump has been installed correctly before connecting it to the mains supply.

8.1 Commissioning the dosing station

Precondition for action:

- ✓ The dosing station has been assembled and installed in accordance with chapter 7 „Installation“ on page 13.
- ✓ All the mechanical fastenings have been inspected to ensure adequate load-bearing capacity.
- ✓ The dosing head screws were tightened by hand.
- ✓ All the hydraulic sections have been inspected to ensure they are adequately leak-proof and that the through flow direction is correct.
- ✓ The operating instructions and all component documentation has been read and understood.

For initial commissioning, it is advisable to use water as the dosing medium to check that the system is leak-proof and that the dosing pump is functioning correctly.

At initial commissioning, it is advisable to prime the pump without backpressure.

Perform the following working steps:

1. Connect the water hose to the hose plug connection on the filler unit.
2. Open the filler unit shutoff valve and allow the water the flow into the delivery package.
3. Stop the filling as soon as the maximum fill level has been reached in accordance with the delivery package.
4. Close the shutoff valve and disconnect the water hose from the filler unit.

➔ Never leave the area during filling!

➔ Always close the shutoff valve by hand, thereby ensuring that the delivery package is not able to overflow.

➔ After filling, always close the external water supply and disconnect the water hose from the filler unit.

5. Startup the dosing pump.
   - ▸ The necessary settings are specified in the operating instructions of the dosing pump.

✓ **The device has been commissioned.**

© Lutz-Jesco GmbH 2016
Subject to technical changes.
160519

9 Shutdown

9.1 Long-term shutdown

CAUTION

Danger of blocking!

Shutdown over the long term can result in blockage of the dosing station. A constitute part of calcium hypochlorite is chalk, which accretes following longer station shut down and can result in blockages.

⇨ Pump c. 1 litre of clear water through the dosing station before shutting it down.

The chapter describes the long-term shutdown of the dosing station.

Pre-conditions for actions:

✓ A container with a minimum of 1 litre of clear water is ready.

Perform the following working steps:

1. Deinstall the suction line GF-2 (pos. 4) from the delivery package and submerge it in a container with clear water. Seal the delivery package with the original package cover.
2. Deinstall the filler unit (pos. 3) from the delivery package. Seal the delivery package with the original package cover.
3. Start the dosing pump.
4. Wait until the dosing pump (pos. 1) has conveyed 1 litre of clear water, then stop the dosing pump.
5. Disconnect the dosing pump from the power supply.
6. Disconnect the hose from the dosing pump and place the suction line in the corner of the collecting pan intended for this purpose.

✓ **The dosing station was decommissioned successfully.**

9.2 Storage

The chapter describes the storage of the dosing station.

Storing the dosing station correctly extends its service life. Avoid negative influences such as extreme temperatures, high humidity, dust, chemicals, etc.

Pre-conditions for actions:

✓ The dosing station has been shut down in accordance with chapter 9.1 „Long-term shutdown“ on page 16.

Ensure ideal storage conditions where possible:

- The storage place must be cold, dry, dust-free and generously ventilated.
- The temperatures lie between + 0 °C and + 50 °C,
- Relative air humidity does not exceed 90 %.

© Lutz-Jesco GmbH 2016

10 Maintenance

Products by Lutz-Jesco are manufactured to the highest quality standards and have a long service life. Nevertheless, some of their parts are subject to wear due to operation (e.g. diaphragms, valve seats, valve balls). This means that regular visual inspections are necessary to ensure a long operating life. Regular maintenance will protect the dosing station from operation interruptions.

DANGER!

Mortal danger from electric shock!

Live parts can inflict fatal injuries.

⇨ Before carrying out any maintenance work, always disconnect the dosing pump from the power supply.

⇨ Secure the dosing pump from accidental power-up.

WARNING!!

Chemical burns or other burns through dosing medium!

While working on the dosing head, valves and connections, you may come into contact with dosing media. Dosing medium residue can be emitted from the dosing head after connecting to the voltage supply

⇨ Use sufficient personal protective equipment.

⇨ Before connecting the mains supply, connect the dosing lines.

⇨ Check that all the screw connections have been tightened correctly and are leak-proof.

⇨ Rinse the dosing station with a liquid (e.g. water) which does not pose any risk. Ensure that the liquid is compatible with the dosing medium.

⇨ Never look into open ends of plugged pipelines and valves.

CAUTION

Danger of personal injury and material damage!

The dosing pump can generate a pressure that is many times the rated one. The dosing medium can escape in the case of material failure or wear on the dosing head, the connection pipe or the seals that are used.

⇨ Carry out maintenance work at the recommended intervals.

CAUTION

Increased risk of accidents due to insufficient qualification of personnel!

The dosing station may only be installed, operated and maintained by personnel with sufficient qualifications. Insufficient qualification will increase the risk of accidents.

⇨ Ensure that all action is taken only by personnel with sufficient and corresponding qualifications.

⇨ Prevent access to the system for unauthorised persons.

10.1 Maintenance intervals

This table gives you an overview of maintenance work and the intervals at which you must carry it out.

Please consult the relevant operating instructions for the maintenance intervals of the individual components.

Maintenance work to be carried out	Frequency
Visual inspection	Before every use
Check the connections for secure seat	Before every use
Clean suction and discharge valves	Regularly
Check that electrical connections are not damaged	Regularly
Replacing the activated carbon on the filler unit.	annually

Table 6: Maintenance information and maintenance intervals

© Lutz-Jesco GmbH 2016
Subject to technical changes.
160519

11 Troubleshooting

See below for information about how to rectify faults on the device or the system. If you cannot eliminate the fault, please consult with the manufacturer on further measures or return the dosing pump for repair.

11.1 Type of fault

11.1.1 Dosing pump not delivering or output too low

Possible cause	Remedy
Wrong type of dosing pump selected	➔ Check the dosing pump's technical data and if necessary select a type with a higher delivery capacity.
Valve leaking or blocked	➔ Clean the valve and vent the dosing pump. ➔ Tighten the screw connections.
Valve installed incorrectly	➔ Reassemble the valve. Ensure that the valve balls are located above the valve seats.
Valve damaged (e.g. valve balls)	➔ Remove the damaged parts or install a new valve.
Suction line is leaking	➔ Seal the leak locations or replace the parts.
The suction line is blocked	➔ Clean the suction line.
Shut-off valves closed	➔ Open the shut-off valves. Inspect the dosing pump for possible damage.
Suction head too high	➔ Place the packaging in the collecting pan.
Current supply interrupted	➔ Reconnect the current supply.
The dosing pump's electrical data does not match that of the mains supply	➔ Check the electrical installation.
System backpressure too high (measured at discharge connection of dosing pump)	➔ Clean blocked injection nozzle. ➔ Install pulsation dampeners to reduce pressure peaks if pipes are too long. ➔ Check function of safety valves.

Table 7: Type of fault: Dosing pump not delivering or output too low

11.1.2 Dosing pump does not prime

Possible cause	Remedy
Valve leaking or blocked	➔ Clean the valve and vent the dosing pump. ➔ Tighten the screw connections.
Valve installed incorrectly	➔ Reassemble the valve. Ensure that the valve balls are located above the valve seats.
Valve damaged (e.g. valve balls)	➔ Remove the damaged parts or install a new valve.
Suction line is leaking	➔ Seal the leak locations or replace the parts.
Suction line is blocked (e.g. screen in foot valve)	➔ Clean the suction line.
Suction head too high	➔ Place the packaging in the collecting pan.
Current supply interrupted	➔ Reconnect the current supply.
Dry the valves	➔ Dampen the dosing head and the valves. ➔ Vent the dosing head.
Air in the suction line with simultaneous pressure on the discharge valve	➔ Vent the dosing head or the lines.

Table 8: Type of fault: Dosing pump does not prime

11.1.3 Delivery rate varies

Possible cause	Remedy
Valve leaking or blocked	➔ Clean the valve and vent the dosing pump. ➔ Tighten the screw connections.
Valve damaged (e.g. valve balls)	➔ Remove the damaged parts or install a new valve.
Suction line is leaking	➔ Seal the leak locations or replace the parts.
The suction line is blocked	➔ Clean the suction line.
The dosing pump's electrical data does not match that of the mains supply	➔ Check the electrical installation.

Table 9: Type of fault: Delivery rate varies

© Lutz-Jesco GmbH 2016

Possible cause	Remedy
System backpressure too high (measured at discharge connection of dosing pump)	➔ Clean blocked injection nozzle. ➔ Install pulsation dampeners to reduce pressure peaks if pipes are too long. ➔ Check function of safety valves.

Table 9: Type of fault: Delivery rate varies

11.1.4 No stroke movement observed

Possible cause	Remedy
Diaphragm return spring broken.	➔ Contact the manufacturer.
Current supply interrupted	➔ Reconnect the current supply.
The dosing pump's electrical data does not match that of the mains supply	➔ Check the electrical installation.
System backpressure too high (measured at discharge connection of dosing pump)	➔ Clean blocked injection nozzle. ➔ Install pulsation dampeners to reduce pressure peaks if pipes are too long. ➔ Check function of safety valves.

Table 10: Type of fault: No stroke movement observed

11.1.5 Diaphragm is torn or tears too often

Possible cause	Remedy
Diaphragm not screwed up to the end stop on the dia-phragm rod	➔ Screw a new diaphragm up to the end stop.
System backpressure too high (measured at discharge connection of dosing pump)	➔ Clean blocked injection nozzle. ➔ Install pulsation dampeners to reduce pressure peaks if pipes are too long. ➔ Check function of safety valves.

Table 11: Type of fault: Diaphragm is torn or tears too often

11.1.6 Air mixer does not work correctly

Possible cause	Remedy
Suction felt soiled	➔ Clean or renew the suction felt.
Air hose kinked	➔ Renew the air hose.
Air pump defective	➔ Contact the manufacturer.

Table 12: Type of fault: Air mixer does not work correctly

© Lutz-Jesco GmbH 2016
Subject to technical changes.
160519

12 Disposal

Note

Do not dispose via domestic waste!

The dosing station can also contain hypochlorite solution residue after long-term shutdown in accordance with chapter 9.1 „Long-term shutdown“ on page 16. It may not be disposed of via the domestic waste.

- ⇨ The device must be disposed of in accordance with applicable local laws and regulations.
- ⇨ Consult your supplier to learn more about the various methods of disposal.
- ⇨ Comply with the operating instructions and safety date sheets for the calcium hypochlorite and the hypochlorite solution.

12.1 Disposing of the dosing station

Pre-conditions for actions:

✓ Chapter 9 „Shutdown“ on page 16 was concluded successfully.

Perform the following working steps:

1. Consult your supplier or the manufacturer to learn more about the various methods of disposal.
2. Ensure that the dosing station can be dispatched safely.
3. Take advantage of the manufacturer's offer for free-of-charge disposal.

✓ **The dosing station was disposed of successfully.**

12.2 Disposal of the delivery package

Pre-conditions for actions:

✓ The delivery package was sealed correctly using the original seal cover.

Perform the following working step:

➔ Dispose of the delivery package in accordance with the valid local laws and specifications.

✓ **The delivery package was disposed of successfully.**

© Lutz-Jesco GmbH 2016

13 Spare parts and Accessories

13.1 Spare parts

Description	Part No.
Membrane spare parts kit ■ LDp05, LDp1 ■ LDp2, LDp4 ■ LDp6, LDp10, LDp15	 41431 41441 41443
Dosing head spare parts kit with valves ■ LDp05, LDp1 ■ LDp2, LDp4 ■ LDp6, LDp10, LDp15	 41433 41445 41447
Sealing set for filler unit	41427
Activated carbon filter 0.1 litre	41437
3 litre activated carbon filling	41439

Table 13: Spare parts

13.2 Accessories

Description	Part No.
PVC hose ■ 4/6 mm ■ 6/12 mm	 97181 97120
Connection for filler unit ■ fitting for a 25 litre delivery package ■ fitting for a 60 litre delivery package	 41428 41429
Connector G1/2“ (ext. Water connection)	41415
Flexible angle connection G1/2“ (ext. Water connection)	88860
Injection nozzle cpl. 6/12	12300366
Back-pressure and pressure-relief valve set PN16	12600052
Suction Line PVC ■ 460 mm for 25 l package ■ 630 mm for 60 l package	 12200982 12200983
Calcium hypochlorite granulate ■ 25 l package ■ 60 l package	 97934 97935
Activated carbon grain size 2 mm ■ 0.1 l ■ 3.0 l	 41437 41439
Chemicals protective equipment	19800021

Table 14: Accessories

© Lutz-Jesco GmbH 2016
Subject to technical changes.
160519

14 Declaration of no objection

Please copy the declaration, stick it to the outside of the packaging and return it with the device.

Declaration of no objection

Please fill out a separate form for each appliance!

We forward the following device for repairs:

Device and device type: ..... Part-no.: .....

Order No.: ..... Date of delivery: .....

Reason for repair: .....

.....

.....

Dosing medium

Description: ..... Irritating: ☐ Yes ☐ No

Properties: ..... Corrosive: ☐ Yes ☐ No

We hereby certify, that the product has been cleaned thoroughly inside and outside before returning, that it is free from hazardous material (i.e. chemical, biological, toxic, flammable, and radioactive material) and that the lubricant has been drained.

If the manufacturer finds it necessary to carry out further cleaning work, we accept the charge will be made to us.

We assure that the aforementioned information is correct and complete and that the unit is dispatched according to the legal requirements.

Company / address: ..... Phone: .....

..... Fax: .....

..... Email: .....

Customer No.: ..... Contact person: .....

Date, Signature: .....

© Lutz-Jesco GmbH 2016

15 Warranty claim

Warranty Application

Please copy and send it back with the unit!

If the device breaks down within the period of warranty, please return it in a cleaned condition with the complete warranty application, filled out.

Sender

Company: ..... Phone: ..... Date: .....

Address: .....

Contact person: .....

Manufacturer order no.: ..... Date of delivery:.....

Device type: ..... Serial number: .....

Nominal capacity / nominal pressure: .....

Description of fault:.....

.....

.....

.....

.....

.....

.....

.....

Service conditions of the device

Point of use / system designation:.....

.....

.....

Accessories used (suction line etc.):.....

.....

.....

.....

.....

Commissioning (date): .....

Duty period (approx. operating hours): .....

Please describe the specific installation and enclose a simple drawing or picture of the chemical feed system, showing materials of construction, diameters, lengths and heights of suction and discharge lines.

© Lutz-Jesco GmbH 2016
Subject to technical changes.
160519

16 EC Declaration of Conformity

(DE) EG-Konformitätserklärung
Hiermit erklären wir, dass das nachfolgend bezeichnete Gerät aufgrund seiner Konzipierung und Bauart sowie in der von uns in Verkehr gebrachten Ausführung den einschlägigen grundlegenden Sicherheits- und Gesundheitsanforderungen der aufgeführten EG-Richtlinien entspricht. Bei einer nicht mit uns abgestimmten Änderung am Gerät verliert diese Erklärung ihre Gültigkeit.

(EN) EC Declaration of Conformity
We hereby certify that the device described in the following complies with the relevant fundamental safety and sanitary requirements and the listed EC regulations due to the concept and design of the version sold by us.
If the device is modified without our consent, this declaration loses its validity.

(FR) Déclaration de conformité CE
Nous déclarons sous notre propre responsabilité que le produit ci-dessous mentionné répond aux exigences essentielles de sécurité et de santé des directives CE énumérées aussi bien sur le plan de sa conception et de son type de construction que du modèle que nous avons mis en circulation.
Cette déclaration perdra sa validité en cas d'une modification effectuée sur le produit sans notre accord explicite.

(ES) Declaración de conformidad CE
Por la presente declaramos que, dados la concepción y los aspectos constructivos del modelo puesto por nosotros en circulación, el aparato mencionado a continuación cumple con los requisitos sanitarios y de seguridad vigentes de las directivas de la U.E. citadas a continuación.
Esta declaración será invalidad por cambios en el aparato realizados sin nuestro consentimiento.

(NL) EU-overeenstemmingsverklaring
Ondergetekende Lutz-Jesco GmbH, bevestigt, dat het volgende genoemde apparaat in de door ons in de handel gebrachte uitvoering voldoet aan de eis van, en in overeenstemming is met de EU-richtlijnen, de EU-veiligheidsstandaard en de voor het product specifieke standaard. Bij een niet met ons afgestemde verandering aan het apparaat verliest deze verklaring haar geldigheid.

(PT) Declaração de conformidade CE
Declaramos pelo presente documento que o equipamento a seguir descrito, devido à sua concepção e ao tipo de construção daí resultante, bem como a versão por nós lançada no mercado, cumpre as exigências básicas aplicáveis de segurança e de saúde das directivas CE indicadas.
A presente declaração perde a sua validade em caso de alteração ao equipamento não autorizada por nós.

Bezeichnung des Gerätes:	Dosierstation für Calciumhypochlorit
Description of the unit:	Dosing station for calcium hypochlorite
Désignation du matériel:	Station de dosagepour l'hypochlorite de calcium
Descripción de la mercancía:	Estación de dosificación de hipoclorito de calcio
Omschrijving van het apparaat:	Doseerstation voor calciumhypochloriet
Designação do aparelho:	Estação de dosagem de hipoclorito de cálcio
Typ: **Type:**	SAFETYCHLORMIX 05 - 15
EG-Richtlinien: **EC directives:**	2006/42/EG, 2014/30/EU Die Schutzziele der Niederspannungsrichtlinie 2014/35/EU wurden gemäß Anhang I, Nr. 1.5.1 der Maschinenrichtlinie 2006/42/EG eingehalten. The protective aims of the Low Voltage Directive 2014/35/EU were adhered to in accordance with Annex I, No. 1.5.1 of the Machinery Directive 2006/42/EC.
Harmonisierte Normen: **Harmonized standards:**	EN ISO 12100, EN 809, EN 61000-6-2, EN 61000-6-3
Dokumentationsbevollmächtigter: **Authorized person for documentation:**	Lutz-Jesco GmbH

Heinz Lutz
Geschäftsführer / Chief Executive Officer
Lutz-Jesco GmbH
Wedemark, 01.05.2016

Lutz-Jesco GmbH
Am Bostelberge 19
30900 Wedemark
Germany

© Lutz-Jesco GmbH 2016

17 Index

A
Accessories 21

C
Commissioning the dosing pump 15

D
Declaration of no objection 22
Delivery capacity data 11
Dimensioned drawings 12
Dimensions 12
Disposal 20

F
Foreseeable misuse 8
Function description 10

G
General warnings 6

H
Handling instructions
  Marking 5
Hydraulic connections 13

I
Installing the Dosing Pump 13
Intended purpose 8
Intended use 8

M
Maintenance 17
Maintenance intervals 17

N
Notes for the Reader 4

O
Operation 15

P
Personal protective equipment 7
Personnel qualification 7
Product description 10
Product warranty 8

Q
Qualified persons 7

S
Safety 6
Scope of delivery 10
Shutdown 16
Signal words
  Explanation 4
Spare parts 21
Start-up 15
Storage 16
Structure of the dosing station 10

T
Technical data 11
Trained persons 7
Troubleshooting 18

W
Warnings
  General warnings 6
  Marking 4
Warning sign
  Explanation 4
Warranty claim 23
Working in a safety-conscious manner 7

© Lutz-Jesco GmbH 2016
Subject to technical changes.
160519

© Lutz-Jesco GmbH 2016