Chlorine control valve
C 7700
Operating instructions

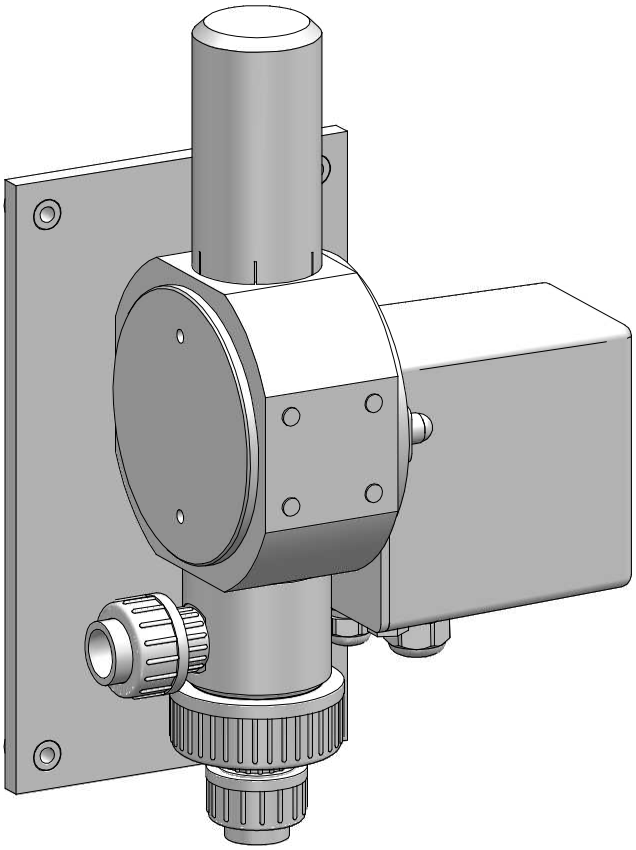

Read the operating manual!

The user is responsible for installation and operation related mistakes!

Original operating instructions

© Lutz-Jesco GmbH 2017

BA-20710-02-V05

Dosing Conveying Control | Liquids Gases Systems

Table of Contents

1 Notes for the Reader 4
1.1 General non-discrimination 4
1.2 Explanation of the signal words 4
1.3 Explanation of the warning signs 4
1.4 Identification of warnings 4
1.5 Instruction for action identification 4

2 Safety 5
2.1 General warnings 5
2.2 Information about chlorine 5
2.3 Hazards due to non-compliance with the safety instructions 6
2.4 Working in a safety-conscious manner 6
2.5 Personal protective equipment 6
2.6 Personnel qualification 6

3 Intended use 8
3.1 Notes on product warranty 8
3.2 Intended purpose 8
3.3 Prohibited dosing media 8

4 Product description 9
4.1 Scope of delivery 9
4.2 Design 9
4.3 Function description 9
4.4 Rating plate 10

5 Technical data 11

6 Dimensions 12

7 Installation 13
7.1 Installation location 13
7.2 Installing the device 13
7.3 Hydraulic installations 14
7.4 Completing the installation 16
7.5 Installation plans 17

8 Servomotors 18
8.1 Opening and closing the servomotor 18
8.2 Servomotor 3-point step 18
8.3 Servomotor 4-20 mA 20

9 Control 23
9.1 Manual operation 23
9.2 Automatic operation 23

10 Operation 23
10.1 Setting the dosing quantity 23
10.2 Shutting down in an emergency 23
10.3 Test intervals 23

11 Start-up 24
11.1 Vacuum system leak test 24
11.2 Turning on the device 24
11.3 Adjusting the dosing capacity 24

12 Shutdown 25
12.1 Short-term shutdown 25
12.2 Long-term shutdown 25
12.3 Disposal of old equipment 25

13 Maintenance 26
13.1 Maintenance intervals 26
13.2 Maintenance accessories 26
13.3 Preparing the system for maintenance 26
13.4 Valve maintenance 26

14 Troubleshooting 29

15 Spare parts 30
15.1 Individual parts for C 7700 up to 2500 g/h 30
15.2 Individual parts for C 7700 from 4 kg/h 32
15.3 Maintenance sets 32

16 EU Declaration of Conformity 33

17 Declaration of no objection 34

18 Warranty claim 35

19 Index 36

© Lutz-Jesco GmbH 2017
Subject to technical changes.
170518

1 Notes for the Reader

This operating manual contains information and behaviour rules for the safe and designated operation of the device.

Observe the following principles:

- Read the entire operating manual prior to starting-up the device.
- Ensure that everyone who works with or on the control valve has read the operating manual and follows it.
- Maintain the operating manual throughout the service life of the control valve.
- Pass the operating manual on to any subsequent owner of the control valve.

1.1 General non-discrimination

In this operating manual, only the male gender is used where grammar allows gender allocation. The purpose of this is to make the text easy to read. Men and women are always referred to equally. We would like to ask female readers for understanding of this text simplification.

1.2 Explanation of the signal words

Different signal words in combination with warning signs are used in this operating manual. Signal words illustrate the gravity of possible injuries if the risk is ignored:

Signal word	Meaning
DANGER	Refers to imminent danger. Ignoring this sign may lead to death or the most serious injuries.
WARNING	Refers to a potentially hazardous situation. Failure to follow this instruction may lead to death or severe injuries.
CAUTION	Refers to a potentially hazardous situation. Failure to follow this instruction may lead to minor injury or damage to property.
NOTE	Refers to a danger which, if ignored, may lead to risk to the machine and its function.

Table 1: Explanation of the signal words

1.3 Explanation of the warning signs

Warning signs represent the type and source of a danger:

Warning sign	Type of danger
	Danger point
	Danger from electrical voltage
	Danger from corrosive substances
	Danger from potentially-explosive substances
	Danger of damage to machine or functional influences

Table 2: Explanation of the warning signs

1.4 Identification of warnings

Warnings are intended to help you recognise risks and avoid negative consequences.

This is how warnings are identified:

Warning sign	**SIGNAL WORD**
Description of danger. Consequences if ignored. ⇨ The arrow signals a safety precaution to be taken to eliminate the danger.	

1.5 Instruction for action identification

This is how pre-conditions for action are identified:

✓ Pre-condition for action which must be met before taking action.

🛠 A resource such as a tool or auxiliary materials required to perform the operating instructions.

This is how instructions for action are identified:

➔ Separate step with no follow-up action.

1. First step in a series of steps.

2. Second step in a series of steps.

▶ Result of the above action.

✓ **Action completed, aim achieved.**

© Lutz-Jesco GmbH 2017

2 Safety

2.1 General warnings

The following warnings are intended to help you eliminate the dangers that can arise while handling the control valve. Risk prevention measures always apply regardless of any specific action.

Safety instructions warning against risks arising from specific activities or situations can be found in the respective sub-chapters.

DANGER

Danger to life from chlorine poisoning!

Chlorine is poisonous. In severe cases, breathing in chlorine may lead to death. It irritates the eyes, the respiratory system and the skin.

- ⇨ Install a gas warning device.
- ⇨ Use sufficient personal protective equipment.
- ⇨ When carrying out any work on the system, use a respirator mask with a Type B gas filter that complies with EN 14387.
- ⇨ Always comply with the accident prevention regulations that apply at the place of use.
- ⇨ Get rid of leaks without delay. You must get rid of even very minor leaks without delay. Together with the humidity, chlorine forms hydrochloric acid and corrosion results in rapidly increasing leakage.
- ⇨ Use only chlorine-resistant seals.
- ⇨ Only use seals once. Reusing them leads to leaks.

DANGER

Increased danger to life from chlorine escape

A fatal quantity of chlorine gas can be released from a leakage.

- ⇨ If chlorine escapes, leave the room immediately.
- ⇨ Use sufficient personal protective equipment.
- ⇨ If chlorine gas escapes, wear a Type 2 self-contained breathing apparatus that complies with EN 137.
- ⇨ Only initiate counter measures after putting on the protective equipment.
- ⇨ Given a serious escape and insufficient equipment or qualifications, leave the work to professional emergency services personnel. Do not take any unnecessary risks.

DANGER

Danger to life through explosions!

When using dosing devices without ATEX certification in a potentially explosive area, explosions can occur that result in fatal injuries.

- ⇨ Never use the device in potentially explosive areas.

WARNING

Increased risk of accidents due to insufficient qualification of personnel!

Chlorinators and their accessories must only be installed, operated and maintained by personnel with sufficient qualifications. Insufficient qualification will increase the risk of accidents.

- ⇨ Ensure that all action is taken only by personnel with sufficient and corresponding qualifications.
- ⇨ Prevent access to the system for unauthorised persons.

NOTE

Damage to the system due to corrosion

Chlorine gas is highly hygroscopic. This means that humidity enters the system at any open connection on devices or pipes, which results in the formation of hydrochloric acid and contamination. Thus inevitably causing damage to the units.

- ⇨ Keep all connections (including in the vacuum system and on all devices not currently in use) closed at all times.
- ⇨ After maintenance work is complete, remove all water residues from the system before placing it into operation.

2.2 Information about chlorine

Chlorine is a hazardous substance. The chemical element chlorine is a greenish-yellow, toxic gas with a pungent odour, which can be detected in the air at concentrations below 1 ppm (= 1 ml/m³).

Chlorine is 2.5 times heavier than air and accumulates at ground level.

Chlorine is extremely toxic for water organisms. The reason for the toxicity of chlorine is its extraordinary reactivity. It reacts with animal and vegetable tissue and thus destroys it.

Air with a chlorine gas content of 0.5 -1% leads to a quick death in mammals and humans, as it attacks the respiratory tract and the pulmonary alveolus (formation of hydrogen chloride or hydrochloride acid).

NOTE

Faults due to insufficient chlorine quality

Impurities in the chlorine gas form deposits in devices and valves and can attack the components chemically. This can lead to malfunctions.

- ⇨ Only use technically pure chlorine that meets the following requirements:
  - Mass content of chlorine at least 99.5%
  - Water content max. 20 mg/kg

Chlorine that complies with EN 937 or EN 15363 meets these requirements.

© Lutz-Jesco GmbH 2017
Subject to technical changes.
170518

2.3 Hazards due to non-compliance with the safety instructions

Failure to follow the safety instructions may endanger not only persons, but also the environment and the device.

The specific consequences can be:

- failure of vital functions of the control valve and the system,
- failure of required maintenance and repair methods,
- danger for individuals through dangerous dosing media,
- danger to the environment caused by substances leaking from the system.

2.4 Working in a safety-conscious manner

Besides the safety instructions specified in this operating manual, further safety rules apply and must be followed:

- accident prevention regulations,
- safety and operating provisions,
- safety provisions for handling dangerous substances (mostly the safety data sheets to dosing media),
- environmental protection provisions,
- applicable standards and legislation.

2.5 Personal protective equipment

Based on the degree of risk posed by the dosing medium and the type of work you are carrying out, you must use corresponding protective equipment. Read the Accident Prevention Regulations and the Safety Data Sheets to the dosing media find out what protective equipment you need.

You will require the minimum of the following personal protective equipment:

Personal protective equipment required	
	Respirator mask
	Protective clothing
	Safety shoes
	Protective gloves

Table 3: Personal protective equipment required

Wear the following personal protective equipment when performing the following tasks:

- Commissioning,
- All work on gas-bearing sections of the plant,
- Changing the chlorine tank,
- Shutdown,
- Maintenance work,
- Disposal.

2.6 Personnel qualification

Any personnel who work on the device must have appropriate special knowledge and skills.

Anybody who works on the device must meet the conditions below:

- attendance at all the training courses offered by the owner,
- personal suitability for the respective activity,
- sufficient qualification for the respective activity,
- training in how to handle the device,
- knowledge of safety equipment and the way this equipment functions,
- knowledge of this operating manual, particularly of safety instructions and sections relevant for the activity,
- knowledge of fundamental regulations regarding health and safety and accident prevention.

All persons must generally have the following minimum qualification:

- training as specialists to carry out work on the device unsupervised,
- sufficient training that they can work on the device under the supervision and guidance of a trained specialist.

These operating instructions differentiate between these user groups:

2.6.1 Specialist staff

Thanks to their professional training, knowledge, experience and knowledge of the relevant specifications, specialist staff are able to perform the job allocated to them and recognise and/or eliminate any possible dangers by themselves.

2.6.2 Trained electricians

Due to their professional training, knowledge and experience as well as knowledge of specific standards and provisions, trained electricians are able to do the electrical work assigned to them and to recognise and avoid any potential dangers by themselves.

They are specially trained for their specific working environment and are familiar with relevant standards and provisions.

They must comply with the legally binding regulations on accident prevention.

2.6.3 Trained persons

Trained persons have received training from the operator about the tasks they are to perform and about the dangers stemming from improper behaviour.

Trained persons have attended all trainings offered by the operator.

© Lutz-Jesco GmbH 2017

2.6.4 Personnel tasks

In the table below you can check what qualifications are the pre-condition for the respective tasks. Only people with appropriate qualifications are allowed to perform these tasks!

Qualification	Activities
Specialist staff	■ Transportation ■ Assembly ■ Hydraulic installations ■ Commissioning ■ Taking out of operation ■ Fault rectification ■ Maintenance ■ Repairs ■ Disposal
Trained persons	■ Storage ■ Control

Table 4: Personnel qualification

© Lutz-Jesco GmbH 2017
Subject to technical changes.
170518

3 Intended use

3.1 Notes on product warranty

Any non-designated use of the device can impair its function and the protection provided. This leads to invalidation of any warranty claims!

Please note that liability is on the side of the user in the following cases:

- The device is operated in a manner which is not consistent with these operating instructions, particularly safety instructions, handling instructions and the section "Intended Use".
- Information on usage and environment (see section 5 „Technical data“ on page 11) is not adhered to.
- Information on the technical data of the servomotors is not adhered to (see section 8 „Servomotors“ on page 18).
- If people operate the device who are not adequately qualified to carry out their respective activities.
- No original spare parts or accessories of Lutz-Jesco GmbH are used.
- Unauthorised changes are made to the device.
- The user uses different dosing media than those indicated in the order.
- Maintenance and inspection intervals are not adhered to as required or not adhered to at all.
- The device is commissioned before it or the corresponding system has been correctly and completely installed.
- Safety equipment has been bridged, removed or made inoperative in any other way.

3.2 Intended purpose

The regulation valve C 7700 is intended for the adjustment of the gas mass flow only. It may only be used in vacuum dosing systems.

The device was designed for use with chlorine, which has a minimum chlorine mass content of 99.5 %.

3.3 Prohibited dosing media

The device must not be used for the following media and substances:

- Any gases except chlorine gas
- Media with a pressure not less than the atmospheric pressure
- Chlorine of insufficient quality

Approval must be sought from the manufacturer before using with other media.

© Lutz-Jesco GmbH 2017

4 Product description

4.1 Scope of delivery

Please compare the delivery note with the scope of delivery. The following items are part of the scope of delivery:

- Valve with servomotor
- Wall panel and installation material (optional)
- Operating instructions

The regulation valve C 7700 is often supplied as a module together with the flow meter. The flow meter is described in a separate document.

4.2 Design

4.2.1 Structure of the device

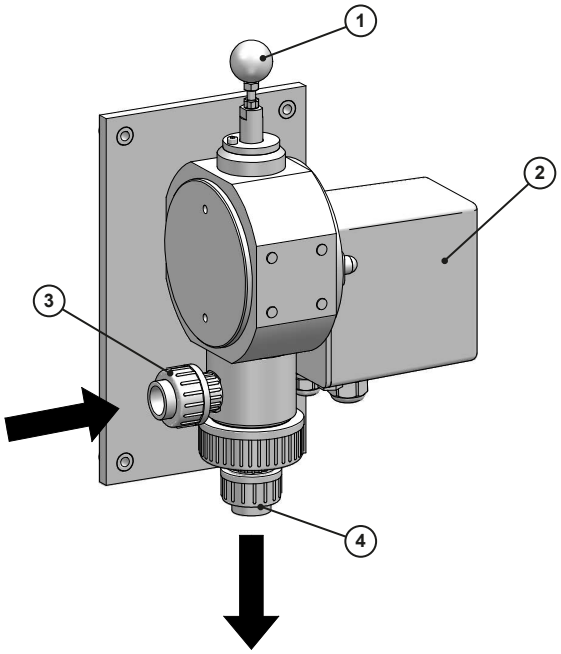

Fig. 1: Structure of the device

Item	Description
1	Hand knob (in the picture without protective cap)
2	Servo motor
3	Input
4	Output

Table 5: General Overview

4.3 Function description

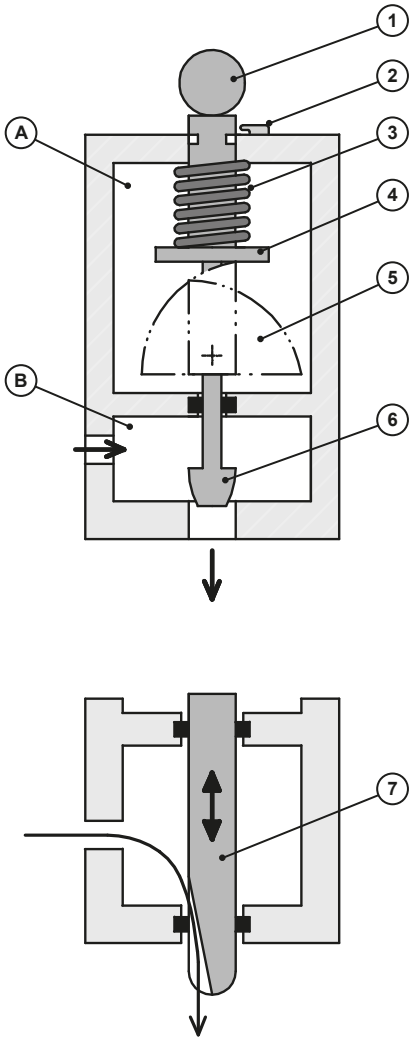

Fig. 2: Functions of the device

The servomotor with a regulation bevel of 90° moves the regulator eccentric (5). It converts the rotation movement into the stroke movement of the valve spindle (4). A spring (3) pushes the valve spindle onto the eccentric.

The actual regulating element is located at the lower end of the valve spindle. Up to 2500 g Cl_2/h can be achieved with a slotted nozzle (7) – a shaft with a diagonal "U" shaped slot. A control cone is used for greater capacity (6).

Both regulating elements are shaped in such a way that the flow cross-section changes proportionally to the angle of rotation of the eccentric. The valves have a linear steady state characteristic.

For manual dosing, it is possible to push the valve spindle on the hand knob (1) to the top position and lock it in place with the slide lock (2). The dosing is then set from the manual valve of the flow meter.

The housing of the regulation valve consists of two chambers, the eccentric chamber (A) and the valve chamber (B). The medium is only present in the valve chamber.

© Lutz-Jesco GmbH 2017
Subject to technical changes.
170518

4.4 Rating plate

There is information on the equipment about safety or the product's way of functioning. The information must stay legible for the duration of the service life of the product.

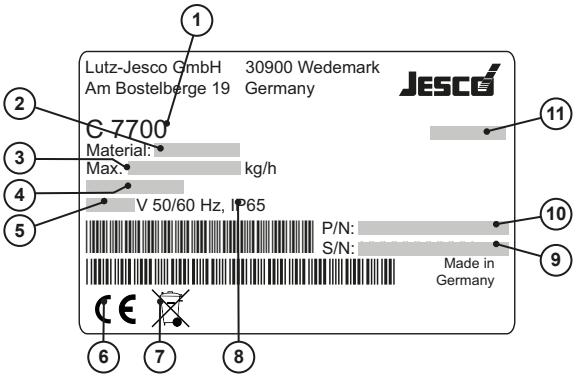

Fig. 3: Rating plate C 7700

Item	Description
1	Product name
2	Components coming into contact with the media
3	Max. dosing quantity
4	Control signal
5	Voltage supply
6	Label showing conformity with applicable European directives
7	WEEE label
8	Protection class
9	Serial number
10	Part number
11	Month / year of manufacture

Table 6: Rating plate

© Lutz-Jesco GmbH 2017

5 Technical data

Description		Value
dosage range		80, 200, 500, 1000, 2500 g Cl_2/h 4, 5, 10, 15, 25, 40, 60, 120, 200 kg Cl_2/h
Operating pressure		-1...0 bar
Required suction vacuum of the injector		-0.25 bar
Valve pressure drop		0.15 bar
Material in contact with the media	up to 2500 g/h	PVC / PVDF / PTFE / FPM
	from 4 kg/h	PVC / Silver / PTFE / FPM
Weight		approx. 5.5 kg
Ambient temperature		0 – 55 °C (no direct sunlight)
Air humidity		max. 95 %, non condensing

Table 7: Technical data

© Lutz-Jesco GmbH 2017
Subject to technical changes.
170518

6 Dimensions

All dimensions in millimetres (mm).

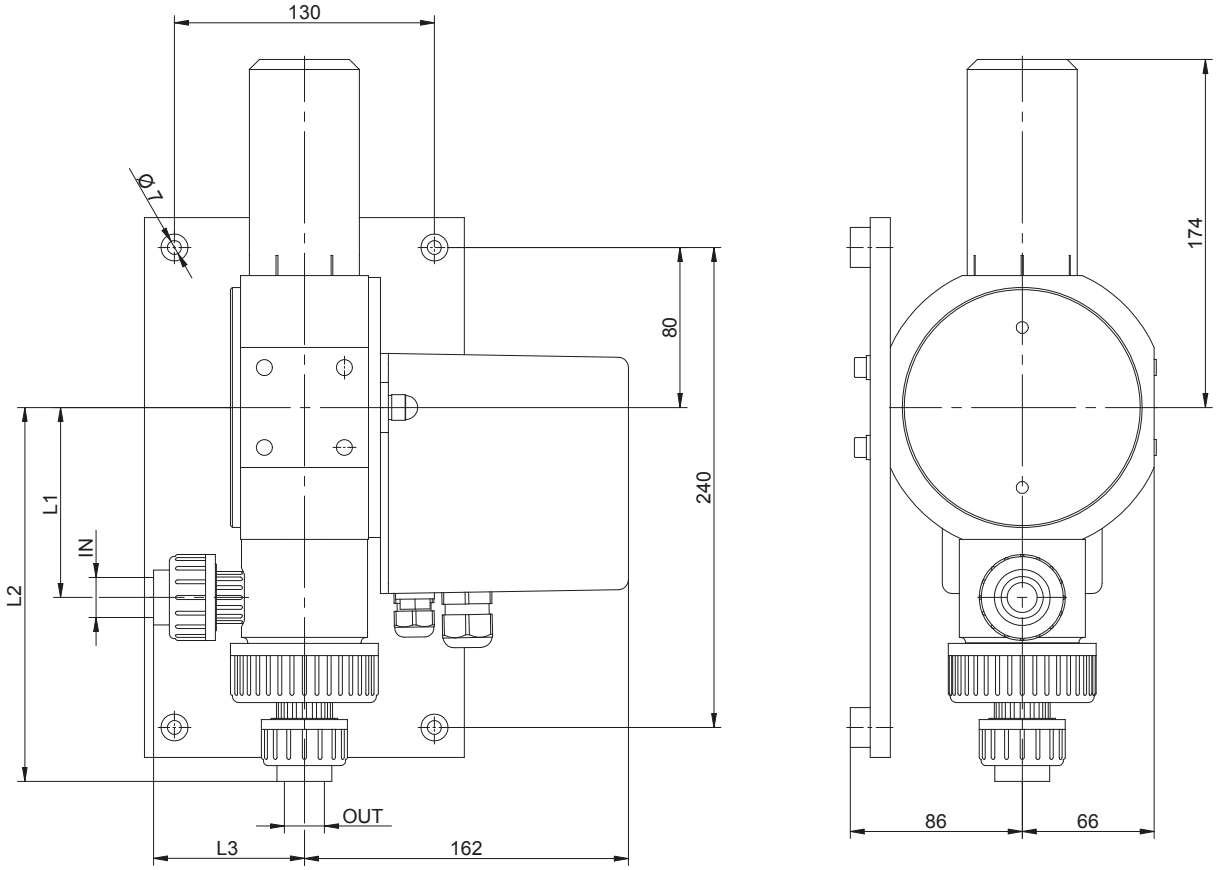

Fig. 4: Dimensional drawing

Connection (IN / OUT)	Dim. L1	Dim. L2	Dim. L3
Hose 8/12 mm	95	170	55
Hose 12/16 mm	95	181	66
Threaded connection DN15 / Ø20	95	187	75.5
Screw connection DN32 / Ø40	103	252	112.5
Screw connection DN40 / Ø50	103	247	128.5

Table 8: Dimensions

© Lutz-Jesco GmbH 2017

7 Installation

WARNING

Increased risk of accidents due to insufficient qualification of personnel!

Chlorinators and their accessories must only be installed, operated and maintained by personnel with sufficient qualifications. Insufficient qualification will increase the risk of accidents.

⇨ Ensure that all action is taken only by personnel with sufficient and corresponding qualifications.

⇨ Prevent access to the system for unauthorised persons.

NOTE

Damage to the system due to incorrect installation

The failure to observe installation instructions (e.g. use of unsuitable tools, incorrect torque) can damage the system parts.

⇨ Use suitable tools.

⇨ Note the specified torque.

7.1 Installation location

The regulation valve is installed in the dosing device room. We do not recommend installation in the same room as the chlorine gas supply.

The room must fulfil the following requirements:

- secured against access by unauthorised persons,
- protected against weather conditions,
- frost-free,
- permissible ambient temperature adhered to (see Section 5 "Technical data" on page 11),
- room of sufficient size to allow trouble-free assembly as well as inspection and maintenance of the device at all times,
- an electrical connection is given,
- the room can be ventilated well,
- the room must comply with the locally valid prescriptions.

7.2 Installing the device

CAUTION

Danger of personal injury and material damage!

If the device is fixed with screws and no washers, it may fall and get damaged.

⇨ To fix it to the wall, use the large washers supplied in the scope of delivery.

The device must be installed perpendicularly to a flat wall surface and must be easily accessible for operation.

Precondition for action:

✓ A flat wall.

✓ The mounting material is suitable for the wall.

Resources required:

🛠 Water level

🛠 Drill

🛠 Fork wrench SW10

Perform the following working steps:

1. Hold the device against the wall. The motor points to the right and the hand knob points upwards.
2. Mark the mounting point on the wall.
3. Drill in the marked holes and insert the rawlplug.
4. Secure the wall panel with the screws and washers included in the scope of delivery.

✓ **The device is fitted on the wall.**

© Lutz-Jesco GmbH 2017
Subject to technical changes.
170518

7.3 Hydraulic installations

7.3.1 Back-pressure regulator

The regulation valve requires a constant differential pressure in order to work properly. This is why we recommend to use a back-pressure regulator that compensates fluctuations in the injector vacuum. Exact dosing is only possible with a back-pressure regulator.

The back-pressure regulator is not always a separate component. It is often integrated into the dosing device or injector non-return valve.

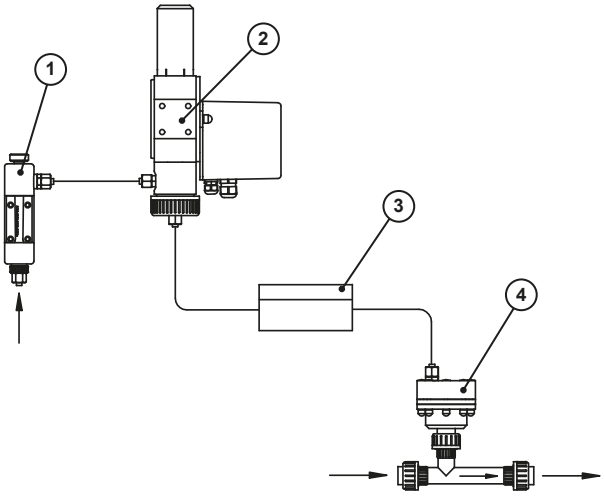

Fig. 5: Installation with back-pressure regulator

Item	Description
1	Flow meter with manual regulation valve
2	Automatic regulation valve
3	Back-pressure regulator
4	Injector with non-return valve

Table 9: Legend Fig. 5

7.3.2 Pipe length and nominal width

For instance, PVC-U pipes or PE hoses are used as vacuum lines.

The following nominal widths are recommended for the vacuum line between dosing device and injector (max. pressure decrease: 25 mbar, calculated at 0.75 bar (a) with 4x90° angles):

Mass flow of chlorine	L2: Length of the vacuum line between the dosing device and the injector					
	5 m	10 m	20 m	30 m	50 m	100 m
0.5 kg/hr	DN 8	DN 8	DN 8	DN 8	DN 8	DN 8
1 kg/hr	DN 8	DN 8	DN 8	DN 8	DN 8	DN 12
2 kg/hr	DN 8	DN 8	DN 8	DN 12	DN 12	DN 12
2.5 kg/hr	DN 8	DN 8	DN 12	DN 12	DN 12	DN 12
4 kg/hr	DN 8	DN 12	DN 12	DN 12	DN 15	DN 15
5 kg/hr	DN 12	DN 12	DN 12	DN 12	DN 15	DN 20
10 kg/hr	DN 12	DN 15	DN 15	DN 20	DN 20	DN 20
15 kg/hr	DN 15	DN 15	DN 20	DN 20	DN 20	DN 25
25 kg/hr	DN 20	DN 20	DN 20	DN 25	DN 25	DN 32
40 kg/hr	DN 25	DN 25	DN 25	DN 32	DN 32	DN 40
60 kg/hr	DN 32	DN 32	DN 32	DN 32	DN 40	DN 40
120 kg/hr	DN 40	DN 40	DN 40	DN 40	DN 50	DN 65
200 kg/hr	DN 50	DN 50	DN 50	DN 50	DN 65	DN 65

Table 10: Recommended nominal widths between the dosing device and injector

© Lutz-Jesco GmbH 2017

If the recommended nominal width for the pipe line is larger than the connection of the device, fit pipes with the same size as the connection straight onto the device and observe the recommended nominal width for the large distance.

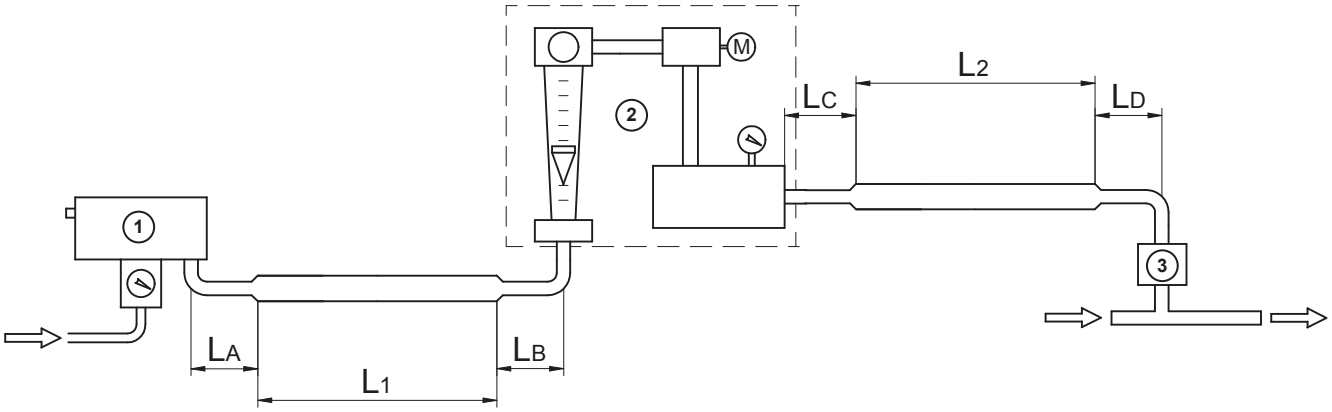

Fig. 6: Long vacuum lines

Item	Meaning
①	Vacuum regulator
②	Dosing device
③	Injector
L_A-L_D	Lines on the device connection each approx. 0.5 m in the connection nominal width
L_1	Line between vacuum regulator and dosing device (see separate instructions)
L_2	Line in the nominal width in accordance with Table 10

Table 11: Long vacuum lines

© Lutz-Jesco GmbH 2017
Subject to technical changes.
170518

7.3.3 Establish the hose connection

Precondition for action:

✓ The device is fitted on the wall.

✓ The transport protection on the connection has been removed.

Resources required:

🛠 Sharp knife

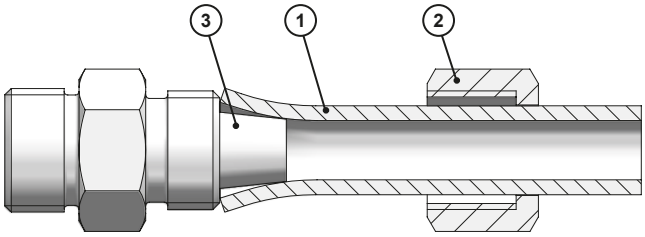

Fig. 7: Establish the hose connection

Perform the following working steps:

1. Cut the hose (1) a at right angles.
2. Slide the union nut (2) onto the hose.
3. Slide the hose end onto the cone of the hose connection (3).
4. Tighten the union nut by hand.
5. Fix the hose to the wall.

✓ **Hose connected fitted.**

7.3.4 Make the PVC seal connection.

Precondition for action:

✓ The device is fitted on the wall.

✓ The vacuum line is fixed with sufficient pipe clamps and meets the connection in an un-tensioned state.

✓ All parts are clean and dry.

✓ The transport protection on the connection has been removed.

Resources required:

🛠 Pipe cutter

🛠 File or chamfer tool

🛠 PVC adhesive and cleaning agent

🛠 Non-fuzzing paper towels

Perform the following working steps:

1. Cut the PVC pipe at right angles. Make a chamfer on the pipe exterior (approx. 3 mm x 20°).
2. Clean the pipe and the bushing with the cleaning agent recommended by the manufacturer of the adhesive.
3. Glue the pipe in the connection. Follow the instructions on the PVC adhesive.

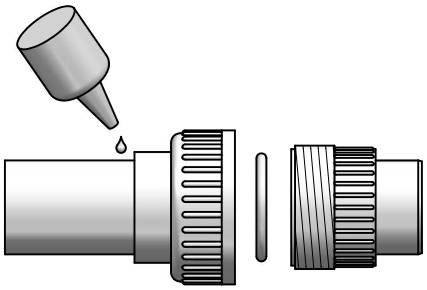

Fig. 8: Making the PVC seal connection

4. Mount the connection on the device. Ensure that the O-ring is fitted.
5. Tighten the union nut by hand.
6. Allow the bond to harden for at least 3 hours prior to the leak test.

✓ **PVC seal connection made.**

7.4 Completing the installation

The cable screw connections must be tightened after assembly in order to ensure the IP protection class of the installation. All covers on the device must be closed. All union nuts on the screw connections of the piping are tightened by hand.

© Lutz-Jesco GmbH 2017

7.5 Installation plans

7.5.1 Proportional dosing without control circuit

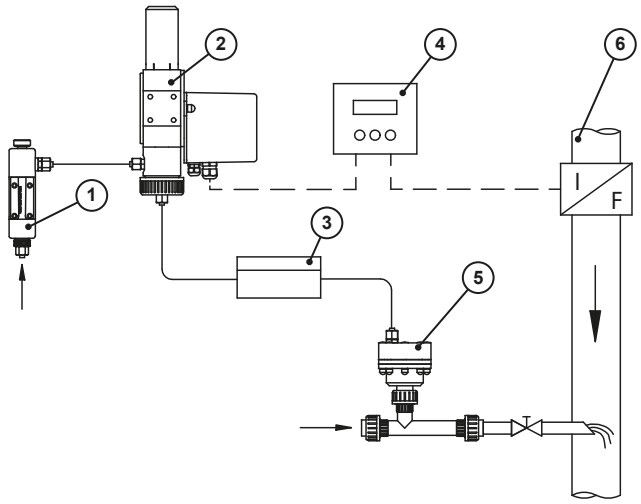

Fig. 9: Installation example 1

Item	Description
1	Flow meter
2	Automatic regulation valve
3	Back-pressure regulator
4	Signal converter (optional)
5	Injector with non-return valve
6	Flow meter of the water line

Table 12: Legend Fig. 9

The automatic regulation valve is connected directly to the flow meter and doses in proportion to the water flow. The optional signal converter can adjust the dosing rate depending on the usage process.

7.5.2 Dosing with closed control circuit

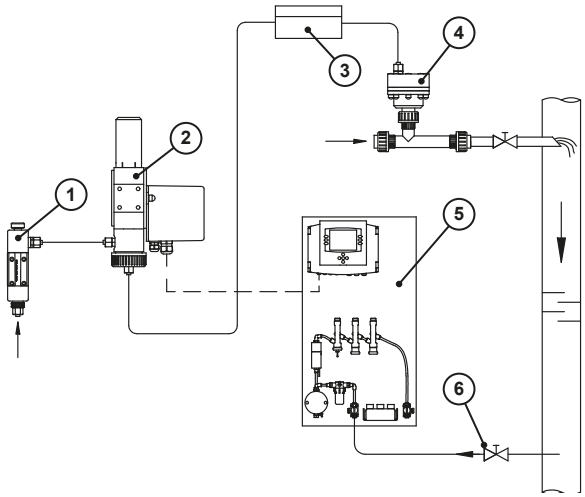

Fig. 10: Installation example 2

Item	Description
1	Flow meter
2	Automatic regulation valve
3	Back-pressure regulator
4	Injector with non-return valve
5	Controller for free chlorine
6	Extracting sample water from the water line

Table 13: Legend Fig. 10

The measuring and control system records changes in the concentration of the free chlorine and controls the regulation valve. The valve opens up to the extent required for the setpoint of free chlorine to be reached in the water line.

© Lutz-Jesco GmbH 2017
Subject to technical changes.
170518

8 Servomotors

DANGER

Mortal danger from electric shock!

Improperly installed or damaged components in the electronics installation can cause injury.

- ⇨ Ensure that all work on the electrical installation is performed by a qualified electrician.
- ⇨ Ensure that all work on the electrical installation is performed in a de-energised state.
- ⇨ Ensure that the power supply is secured with a fault current protective circuit.
- ⇨ Replace damaged cables or components without delay.

The regulation valve C 7700 can be equipped with various servomotors. This section describes the electrical connection for the various versions and how they are operated.

8.1 Opening and closing the servomotor

Resources required:

🛠 Philips screwdriver size Ph2

Open

Perform the following working steps:

1. Loosen the two screws on the cover.
2. Pull the cover towards the right.

✓ **Servomotor is open.**

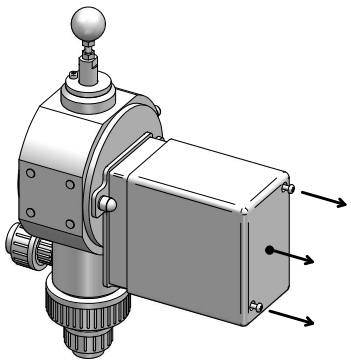

Fig. 11: Opening the servomotor

Close

Perform the following working steps:

1. Push the cover onto the motor from the right side.
2. Tighten the screws with approx. 0.5 Nm.

✓ **Servomotor is closed.**

8.2 Servomotor 3-point step

8.2.1 Technical data

Description	Value
Voltage supply	230 V ±10 %, 50/60 Hz ±5 %, optional: 115 V AC or 24 V AC (see rating plate)
Power consumption	7 VA
Protection class	IP 65
Actuating time	30 s (optionally other times, see rating plate)
Regulation signal	3-point step
Position feedback	0 - 1000 Ohm
Max. potentiometer load	0.3 W, loop current 2 mA
Regulation bevel	90°
Torque	10 Nm
Switching capacity of relays (optional)	Max. 2.5 A / 250 V AC

Table 14: Technical data

8.2.2 Circuit diagram and terminal connection

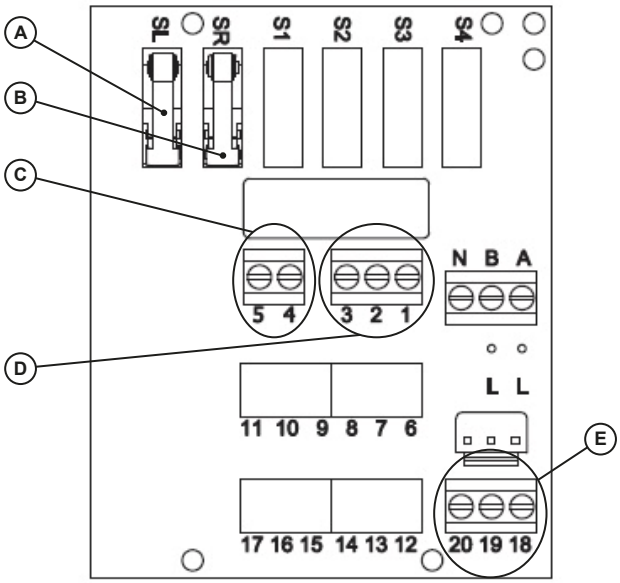

Fig. 12: Circuit board 3-point step

© Lutz-Jesco GmbH 2017

Item	Description
A	SL microswitch (valve closed)
B	SR microswitch (valve open)
C	Microswitch outputs
D	Voltage supply input
E	Feedback potentiometer output

Table 15: Elements on the circuit board

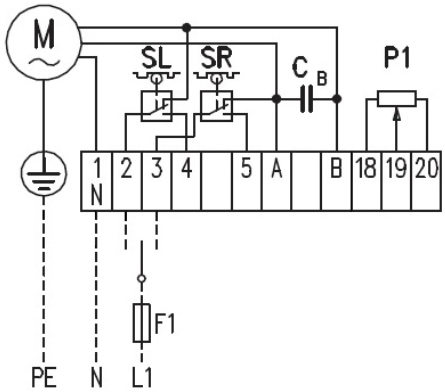

Fig. 13: Circuit diagram for circuit board 3-point step

Terminal		Function	
	PE	Protective earth (on housing)	Voltage supply
1	N	Neutral conductor	
2	L	Close phase valve	
3	L	Open phase valve	
4	L	Closed end position	Voltage output
5	L	Open end position	
18		Resistance start	Feedback potentiometer (observe max. load)
19		Driver	
20		Resistance end	
N, B, A		Used internally	

Table 16: Terminal connection 3-point step

8.2.3 Limit switch adjustment

The servomotor in its delivery state is adjusted to a setting range of 0-100 %. A different setting is only useful in special cases.
Before you change anything on the servomotor, check if the counternut of the adjusting spindle is tightened securely.

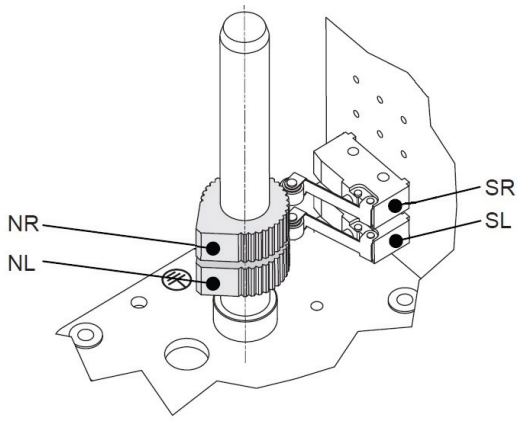

Fig. 14: Limit switch

Item	Description	Function
NL	Trigger cam left end position	Valve closed
SL	Switch for left end position	
NR	Trigger cam right end position	Valve open
SL	Switch for right end position	

Table 17: Limit switch

Both trigger cams (NR, NL) move with the main shaft. You activate the limit switches (SR, SL). The rotary selector switches can be adjusted by hand without tools.

After adjusting the limit switches, the motor must move to both end positions. This allows the slip coupling of the potentiometer to adjust itself.

The regulation bevel of the motor is 90° for a dosing capacity of 0-100 %. If the regulation bevel is greater, the feedback potentiometer will shift during operation.

© Lutz-Jesco GmbH 2017
Subject to technical changes.
170518

8.3 Servomotor 4-20 mA

8.3.1 Technical data

Description	Value
Voltage supply	230 V ±10 %, 50/60 Hz ±5 %, optional: 115 V AC or 24 V AC (see rating plate)
Power consumption	7 VA
Protection class	IP 65
Actuating time	30 s (optionally other times, see rating plate)
Regulation signal	4-20 mA (internal working resistance 250 ohms)
Position feedback	4-20 mA (max. working resistance 500 ohms)
Regulation bevel	90°
Torque	10 Nm
Switching capacity of the fault signalling relay	Max. 125 V AC/DC Max. 10 VA

Table 18: Technical data 4-20 mA

8.3.2 Circuit diagram and terminal connection

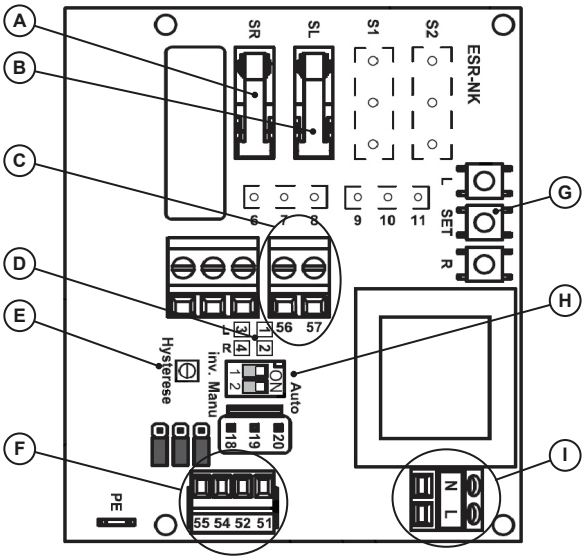

Fig. 15: Circuit board 4-20 mA

Item	Description
A	SR microswitch (valve open)
B	SL microswitch (valve closed)
C	Fault signalling relay
D	Status display LEDs
E	Potentiometer hysteresis
F	Signal connections 20 mA input and output
G	Programming keys
H	DIP switch operating mode Man/AUTO and operating direction
I	Voltage supply input

Table 19: Elements on the circuit board

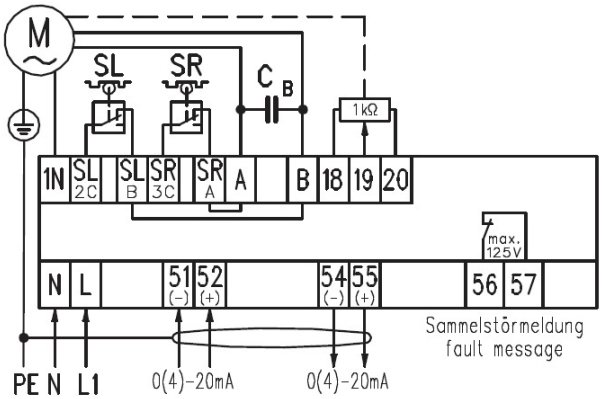

Fig. 16: Circuit diagram for circuit board 4-20 mA

Terminal		Function	
⏚	PE	Protective earth (on housing)	Voltage supply
N	N	Neutral conductor	
L	L	Phase	
51	-	Input 4-20 mA	These two signals are located on a shared potential
52	+		
54	-	Position feedback 4-20 mA	
55	+		
56		Relay "fault", NC, open = fault	Interrupts in case of a power failure due to wire breakage, control signal or manual mode
57			
All other terminals are used internally.			

Table 20: Terminal connection 4-20 mA

© Lutz-Jesco GmbH 2017

8.3.3 Operator controls of the servomotor

LEDs

LED arrangement	No. (colour)	Meaning
L 3 1 R 4 2	1 (blue)	Operation
	2 (red)	Fault ■ Voltage supply failure ■ Servomotor in manual operation ■ Current input below 2 mA (if signal is 4-20 mA)
	3 (yellow)	Left-hand rotation active (close valve)
	4 (green)	Right-hand rotation active (open valve)

Table 21: LED functions

DIP switch

	Switch	Position
inv. Manu 1 2 ON Auto	1	Rotation direction of the servomotor left: 20 mA = valve closed right: 20 mA = valve open*
	2	Operating mode of the servomotor Left: manual operation Right: automatic operation*
	* delivery state	

Table 22: DIP switch functions

Keys

Arrangement	Key	Meaning
L	L	Manual mode left-hand rotation = close valve
SET	SET	Program end position
R	R	Manual mode right-hand rotation = open valve
	The keys have no functions in automatic mode	

Table 23: Key functions

Hysteresis potentiometer

	Direction of rotation	Position
Hyster.	Clockwise	Increase hysteresis
	Anti-clockwise	Reduce hysteresis
	R	Manual mode right-hand rotation = open valve
	The hysteresis is adjustable in the 0.1 - 2 mA range. If the setting is too fine, the motor might run continuously even with a stable input signal.	

Table 24: Key functions

8.3.4 Programming the servomotor

> The regulation bevel of the motor is 90° for a dosing capacity of 0-100%. If the regulation bevel is greater, the feedback potentiometer will shift during operation and the device will not function reliably.

The servomotor is adjusted to a setting range of 0-100% in its delivery state. A different setting is only useful in special cases.
Before you change anything on the servomotor, check if the counternut of the adjusting spindle is tightened securely.

Perform the following working steps:

1. Switch DIP switch 2 to manual operating mode.
2. For a minimum and maximum dosing capacity, adjust the trigger cams to the desired position. The rotary selector switches can be adjusted by hand without tools.
   - ▶ Rotary selector switches adjusted.
3. After adjusting the rotary selector switches, the motor must move to both end positions. This allows the slip coupling of the potentiometer to adjust itself. First, press the R button and keep it pressed until the motor stops, then press the L button.
   - ▶ This adjusts the slip clutch on the potentiometer.
4. Press and hold down the L key until the rotary selector switch turns off the motor with the valve closed. Then release the L key.
5. Press the SET key.
   - ▶ The blue LED flashes.
6. Press the L key 1x within 3 s.
   - ▶ The blue LED turns off.
   - ▶ The end position 0% is programmed.
7. Press and hold down the R key until the rotary selector switch turns off the motor with the valve open. Then release the R key.
8. Press the SET key.
   - ▶ The blue LED flashes.
9. Press the R key 1x within 3 s.
   - ▶ The blue LED turns off.
   - ▶ The end position 100% is programmed.

© Lutz-Jesco GmbH 2017
Subject to technical changes.
170518

10. Switch DIP switch 2 to automatic operation.

✓ **The servomotor is programmed.**

8.3.5 Select signal type

The servomotor can be used with these two signals:

- 0-20 mA
- 4-20 mA

In the delivery state, it is adjusted to 4-20 mA. A line rupture is detected with this signal type, and the relay registers it as a "fault".

This setting also applies to the "Setpoint" input and the "Actual value" output.

Setting the signal type 0-20 mA

1. Switch DIP switch 2 to manual operation.
2. Switch off the voltage supply.
3. Press and hold down the SET and R keys.
4. Switch on the voltage supply while holding down the keys.
5. Switch DIP switch 2 to automatic operation.

✓ **Signal type 0-20 mA set.**

Setting the signal type 4 - 20 mA

1. Switch DIP switch 2 to manual operation.
2. Switch off the voltage supply.
3. Press and hold down the SET and L keys.
4. Switch on the voltage supply while holding down the keys.
5. Switch DIP switch 2 to automatic operation.

✓ **Signal type 4 - 20 mA set.**

© Lutz-Jesco GmbH 2017

9 Control

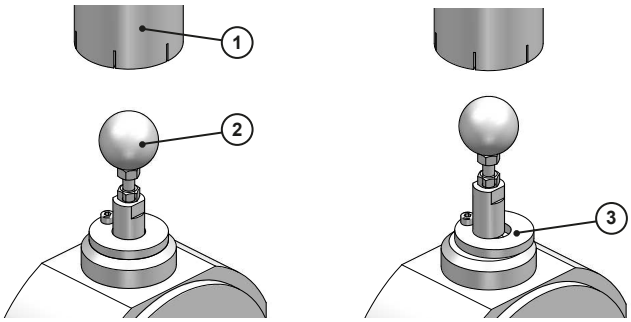

Fig. 17: Change between automatic - manual

9.1 Manual operation

The electrical regulation valve must be completely opened for manual operation. To this end, the valve spindle is locked in the upper position.

Perform the following working steps:

1. Remove the upper protective cover (1) on the electrical control valve.
2. Grasp the ball knob (2) and pull the valve spindle upwards against the spring force.
3. Swing the locking washer (3) into the groove.
4. Release the ball knob.

✓ **Electrical regulation valve locked on OPEN.**

You can now set the dosing quantity from the manual regulation valve.

9.2 Automatic operation

The manual dosing valve must be completely opened for automatic operation. The electrical regulation valve must be unlocked.

Perform the following working steps:

1. Remove the upper protective cover (1) on the electrical control valve.
2. Grasp the ball knob (2) and pull the valve spindle upwards against the spring force.
3. Swing the locking washer (3) out of the groove into the central position.
4. Let the valve spindle be pulled downwards by the spring force and release the ball knob.

✓ **Device switched to automatic operation.**

The dosing quantity now follows the electrical control signal automatically.

10 Operation

10.1 Setting the dosing quantity

No operation is required in the normal mode. The electrical regulation valve adjusts the dosing quantity automatically, depending on the control signal. If necessary, the device can be locked on the fully open position to allow manual operation (see section 9.1 „Manual operation“ on page 23).

10.2 Shutting down in an emergency

DANGER

Danger to life from chlorine poisoning!

Chlorine is poisonous. In severe cases, breathing in chlorine may lead to death. It irritates the eyes, the respiratory system and the skin.

- ⇨ If chlorine escapes, leave the room immediately.
- ⇨ Use sufficient personal protective equipment.
- ⇨ If chlorine gas escapes, wear a Type 2 self-contained breathing apparatus that complies with EN 137.
- ⇨ Only initiate counter measures after putting on the protective equipment.
- ⇨ Given a serious escape and insufficient equipment or qualifications, leave the work to professional emergency services personnel. Do not take any unnecessary risks.

The measures depend on the type of accident and should be planned and executed by professional personnel.

10.3 Test intervals

The tasks described here are to be performed by the operating company. Further work on the device is described in the section "maintenance" and can only be performed by qualified personnel.

The components of the chlorination installation must be subject to a daily visual check. Inform service personnel of anything conspicuous or a chlorine smell.

© Lutz-Jesco GmbH 2017
Subject to technical changes.
170518

11 Start-up

11.1 Vacuum system leak test

NOTE

Operating faults through leakages in the vacuum system

Small leaks in the vacuum system will not be recognised in normal operation, since no chlorine escapes. Air will enter the system with moisture. The moisture can combine with the chlorine to create deposits and operating malfunctions.

With the injector switched off, there may be a slight chlorine smell.

⇨ Check the vacuum system.

⇨ Ensure that all action is taken only by personnel with sufficient and corresponding qualifications.

The leak-tightness of the vacuum system is inspected together with the vacuum regulator.

Precondition for action:

✓ The vacuum system is fully assembled.

✓ All the open connections of the vacuum system were closed.

✓ The injector is ready for operation.

Perform the following working steps:

1. Interrupt the chlorine supply. To do so, either connect the tank valve of a valve in the supply line to the vacuum regulator.
2. Open the manual dosing valve on the dosing device.
3. Lock the valve spindle of the electrical control valve in the open position.
4. Switch on the injector and wait until the vacuum meter in the system displays a minimum of -0.5 bar.
5. Switch off the injector.
6. The vacuum must stay unchanged for at least five minutes.
7. If the vacuum collapses quickly, eliminate the leak and repeat the check on the vacuum system.

✓ **Vacuum system checked.**

11.2 Turning on the device

Precondition for action:

✓ The device is fully assembled.

✓ The leak test was performed.

Perform the following working steps:

1. Switch the electrical regulation valve to manual operation (see section 9.1).
2. Switch the injector on.
3. Open the chlorine supply.
4. Set the dosing quantity on the manual dosing valve. Observe the application process to prevent overdosing. Adapt the dosing quantity is necessary.
5. When the chlorine value corresponds approximately to the setpoint during the application process, adjust the measurement amplifier and the controller.
6. Switch the electrical regulation valve to automatic operation (see section 9.2).

✓ **Device switched on.**

Keep an eye on the dosing system during the first operating hours to ensure proper functioning.

11.3 Adjusting the dosing capacity

If the dosing capacity of the regulation valve is significantly higher than required, the capacity of the dosing system must be adjusted.

- Program the PID controller more finely.
- Adjust the regulation signal of the process.
- Adjust the calibration of the servomotor.

The above listed measures are helpful when the regulation valve doses up to twice the required amount. A smaller regulating element should be fitted in case of stronger over-dimensioning. The working steps are the same as described in section 13 „Maintenance“ on page 26.

© Lutz-Jesco GmbH 2017

12 Shutdown

12.1 Short-term shutdown

Perform the following working steps:

1. Close the chlorine tank valves.
2. Use the injector to suck off the remaining chlorine.
3. If present, connect the service valve between the dosing device and the injector.
4. Switch off the injector.

✓ **Chlorinator shut down for the short term.**

12.2 Long-term shutdown

Perform the following working steps:

1. Close the chlorine tank valves.
2. Use the injector to suck off the remaining chlorine.
3. Run the chlorinator for approximately five minutes with nitrogen or dry compressed air.
4. If present, connect the service valve between the dosing device and the injector.
5. Switch off the injector.
6. Close all the open connections to protect the lines and devices from humidity and dirt.

✓ **Chlorinator shut down for the long term.**

The device remains in the installation location during the operating pause. All connections remain closed. The voltage supply should remain active so that condensate is unable to gather in the electrical devices.

Ensure ideal storage conditions where possible:

- The storage place must be cold, dry, dust-free and generously ventilated.
- Temperatures between +2 °C and +40 °C.
- Relative air humidity must not exceed 90 %.

> After longer periods of inactivity, we recommend performing at least one leak test (see section 11.1 „Vacuum system leak test“ on page 24) before start-up.

12.3 Disposal of old equipment

- Before disposing of the old equipment, you must clean off the remaining chlorine by rinsing it with nitrogen or air.
- The device must be disposed of in accordance with applicable local laws and regulations. It should not be disposed of as domestic waste!

As the disposal regulations may differ from country to country, please consult your supplier if necessary.

In Germany, the manufacturer must provide free-of-charge disposal. provided the device has been safely returned along with a declaration of no objection (see page 34).

© Lutz-Jesco GmbH 2017
Subject to technical changes.
170518

13 Maintenance

Products by Lutz-Jesco are manufactured to the highest quality standards and have a long service life. However, some parts are subject to operational wear. This means that regular visual inspections are necessary to ensure a long operating life. Regular maintenance will protect the device from operation interruptions.

DANGER

Mortal danger from electric shock!

Live parts can inflict fatal injuries.

⇨ Before carrying out any maintenance work, always disconnect the device from the power supply.

⇨ Secure the power supply against accidental activation.

DANGER

Danger to life from chlorine poisoning!

Do not carry out maintenance or any other work on the chlorinator until the system has been decommissioned and all of the chlorine gas has been removed from the lines. The failure to follow this instruction presents a significant risk of injury.

⇨ Prior to any maintenance work, prepare the system in accordance with section 13.3 „Preparing the system for maintenance“ on page 26.

13.1 Maintenance intervals

Subject the chlorinator to regular maintenance, to prevent malfunctions. Perform the maintenance in the following intervals:

Interval	Maintenance
Annually	■ Cleaning the device ■ Replace all seals ■ Functional control ■ Checking for leaks

Table 25: Maintenance intervals

In some cases, regional regulations may require shorter maintenance intervals. Carry out maintenance before recommissioning the system after a long period out of service. Maintenance intervals not depend only on how frequently the equipment is used. Chemical wear, for example of rubber parts, begins with the initial medium contact and continues irrespective of the usage.

13.2 Maintenance accessories

Description
Silicone grease, medium viscosity 35 g for application to seals
Face spanner for screw cap
Plastic tools for dismantling O-rings

Table 26: Maintenance accessories

The spare parts for maintenance are provided by Lutz-Jesco GmbH as a maintenance set. See section 15.3 „Maintenance sets“ on page 32.

13.3 Preparing the system for maintenance

Perform the following working steps:

1. Close the valves of the chlorine tank.
2. Use the injector to suck off the remaining chlorine.
3. Run the chlorinator for approximately five minutes with nitrogen or dry compressed air.
4. Close the service valve between the dosing device and the injector.
5. Switch off the injector.

✓ **The system is prepared for maintenance.**

13.4 Valve maintenance

The seals of the electrical regulation valve must be replaced and the device cleaned each time it receives maintenance.

Section 15 „Spare parts“ on page 30 gives you an overview of all electrical regulation valve components.

Precondition for action:

✓ The system is prepared in accordance with section 13.3.

✓ The fitting maintenance set is available.

13.4.1 Dismantling the valve

Perform the following working steps:

1. Unplug the hydraulic connections from the device and close the lines to prevent the penetration of air humidity.
2. Remove the large screw cap from the side of the eccentric chamber. If necessary, use a face spanner.
3. Remove the cap on the upper part of the valve.
4. Lock the adjusting spindle on the manual operation position.

© Lutz-Jesco GmbH 2017

5. Loosen the large bottom union nut on the valve and remove the valve seat by turning it gently.
6. If the valve has a throughput of 4000 g/h or more, unscrew the valve disc from the valve disc holder. Hold the valve disc holder firmly from the ball knob.
7. Unscrew the guide nut and pull the entire module upwards out of the valve. There is no need of any further dismantling work on this module.
8. Unscrew the sealing bushing including the seals inside the valve.
9. If the valve has a max. throughput of 2500 g/h, dismantle the valve seat.

✓ **Valve dismantled.**

Usually, there is no need to replace the O-ring between the housing and the mounting plate. This is why you do not need to dismantle the servomotor.

13.4.2 Cleaning and assessing parts

Auxiliary materials and tools:

- Cleaning alcohol
- Cotton buds or pipe cleaner
- Magnifying lens
- Torch

Perform the following working steps:

1. Clean all parts that got soiled from contact with chlorine. You do not need to remove the grease on the needle bearing, spring and eccentric.
2. If the regulation valves have a slotted nozzle, make sure that the slotted nozzle is clean. A magnifying lens can come in handy if the dosing capacity is low.
3. Wipe the PVC parts with a cloth slightly soaked in cleaning alcohol.
   ▶ Valve cleaned.
4. Check all components sealed with an O-ring. Surfaces in contact with the O-ring must have no scratches.
5. Examine the lower part of the adjusting spindle (in small devices) or valve disc holder (in larger devices). Cylindrical surfaces must have no scratches.

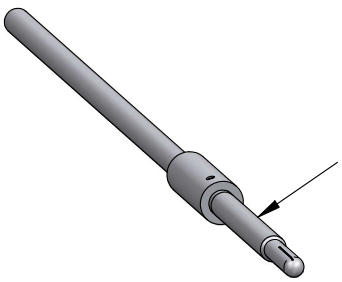

Fig. 18: Cylinder surface on adjusting spindle

6. Make sure that the axial needle bearing moves freely.

✓ **Valve components cleaned and checked.**

13.4.3 Fitting the valve

Perform the following working steps:

1. Fit the larger seal set into the sealing bushing. The seal set consists of a hard plastic ring and an O-ring. A small amount of silicone grease may be used for fitting the seal.
2. Rub the O-ring Ø13 lightly with silicone grease and insert it into the groove of the sealing bushing. The silicone grease helps it stick into the groove.
3. Screw the sealing bushing together with the seals into the device. Make sure that the seals do not fall out. Tighten the sealing bushing by hand. A higher tightening torque does not increase the tightness.
4. Rub in a small amount of silicone grease on the adjusting spindle or valve disc holder of the smooth Ø6 mm shaft.
5. Fit the entire module together with the valve disc holder into the device. Make sure that slotted nozzle is not plugged with grease. Tighten the guide nut by hand.
6. Devices up to 2500 g/h: Fit the smaller seal set into the valve seat. Do not apply any grease on this seal. Fit the seal holder and union nut.
7. Devices from 4000 g/h: Screw the valve disc onto the valve disc holder. Do it with a socket wrench. The largest valve discs can be turned with a slotted screwdriver or a coin.
8. Fit the O-ring outside, on the valve seat. Rub it lightly with silicone grease. Fit the valve seat into the housing and fix it with the large union nut.
9. Place the screw cap including seal and tighten it by hand.
10. Place the cap over of the ball knob.

✓ **Valve installed.**

13.4.4 Setting the adjusting spindle

The correct adjustment of the valve spindle must be checked after maintenance. This inspection and adjustment should be carried out in the chlorine gas dosing system.

Checking the zero point adjustment

1. Switch on the injector and connect the chlorine gas supply to the system.
2. Switch the electrical regulation valve to automatic operation and open the manual dosing valve of the flow meter.
3. Move the electrical regulation valve to the closed position.
   ▶ The flow meter should not indicate any throughflow now.
4. Allow the servomotor to open the valve.
   ▶ The flow meter indicates the first throughflow after approximately 10% of the motor's total runtime. With standard motors, this occurs after 3 seconds.

✓ **Zero point adjustment checked.**

If the valve behaves as described, the zero point does not need to be readjusted. Continue your work with 13.4.5.

© Lutz-Jesco GmbH 2017
Subject to technical changes.
170518

Adjusting the zero point

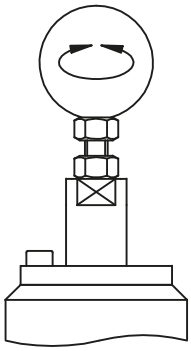

Fig. 19: Zero point adjustment

5. Move the electrical regulation valve to the closed position.
6. Loosen the counternut on the upper guide bolt.
7. Turn the adjusting spindle on the ball knob until the flow meter indicates zero throughflow.
8. Turn the ball knob ¼ rotation clockwise and then tighten the counternut on the upper guide bolt.
9. Repeat the zero point adjustment check at least once.

✓ **Zero point adjusted.**

13.4.5 Finishing maintenance

Perform the following working steps:

1. Perform a leakage test (see section 11.1 „Vacuum system leak test“ on page 24).
2. Make a note of the date and scope of the maintenance performed.
3. Attach a sticker displaying the maintenance date to the device.
4. Close the device.
5. Restore all hydraulic connections.
6. Touch up damaged paint.
7. To restart the system, proceed in accordance with the instructions in section 11 „Start-up“ on page 24.

✓ **Maintenance completed.**

© Lutz-Jesco GmbH 2017

14 Troubleshooting

All possible errors are listed in this table.

Problem	Possible cause	Remedy
The system does not achieve its full dosing capacity.	The manual valve on the flow meter is not completely open.	Open valve.
	Not enough chlorine tanks are connected or some are empty.	Connect more chlorine tanks. Replace empty tanks.
	Injector suction is insufficient.	Increase injector suction capacity: ■ Increase motive water pressure. ■ Lower injector back pressure. ■ Fit more powerful injector.
	The slot of the slotted nozzle is dirty.	Clean slotted nozzle.
	The adjusting spindle in the valve is not adjusted properly.	Adjust the adjusting spindle (see section 13.4.4). Check if the hexagon nut is tightened against the guide bolt.
	The regulation bevel of the servomotor has been limited.	Set the regulation bevel to the maximum regulation bevel of 90°.
The dosing capacity of the valve is too small/large for the consumption process.	The selected valve is too small/large.	The valve spindle can be replaced if the dosing capacity is 2500 g/h or smaller. All other parts remain the same. From 4 kg/h upwards, all valve discs and valve seats must be replaced together. Another housing might be required.
The valve does not respond correctly.	The potentiometer of the 3-point step servomotor is not connected properly.	Make sure that the potentiometer scraper on the controller has been connected as a scraper.
	The signals do not match.	Check if the controller and valve both work at 4-20 mA.
	The potentiometer reaches the mechanical limit in an end position.	Adjust the potentiometer including the slip coupling in such way that the mechanical limit is not reached.
	The voltage supply has been interrupted. All LEDs are off.	Re-connect the voltage supply.
The valve does not close completely.	The adjusting nozzle might allow a very small quantity to keep flowing, even at 0% control. C 7700 is a regulation valve, not a shutoff valve.	If you want to shut off completely, fit a shutoff valve.

Table 27: Troubleshooting

© Lutz-Jesco GmbH 2017
Subject to technical changes.
170518

15 Spare parts

15.1 Individual parts for C 7700 up to 2500 g/h

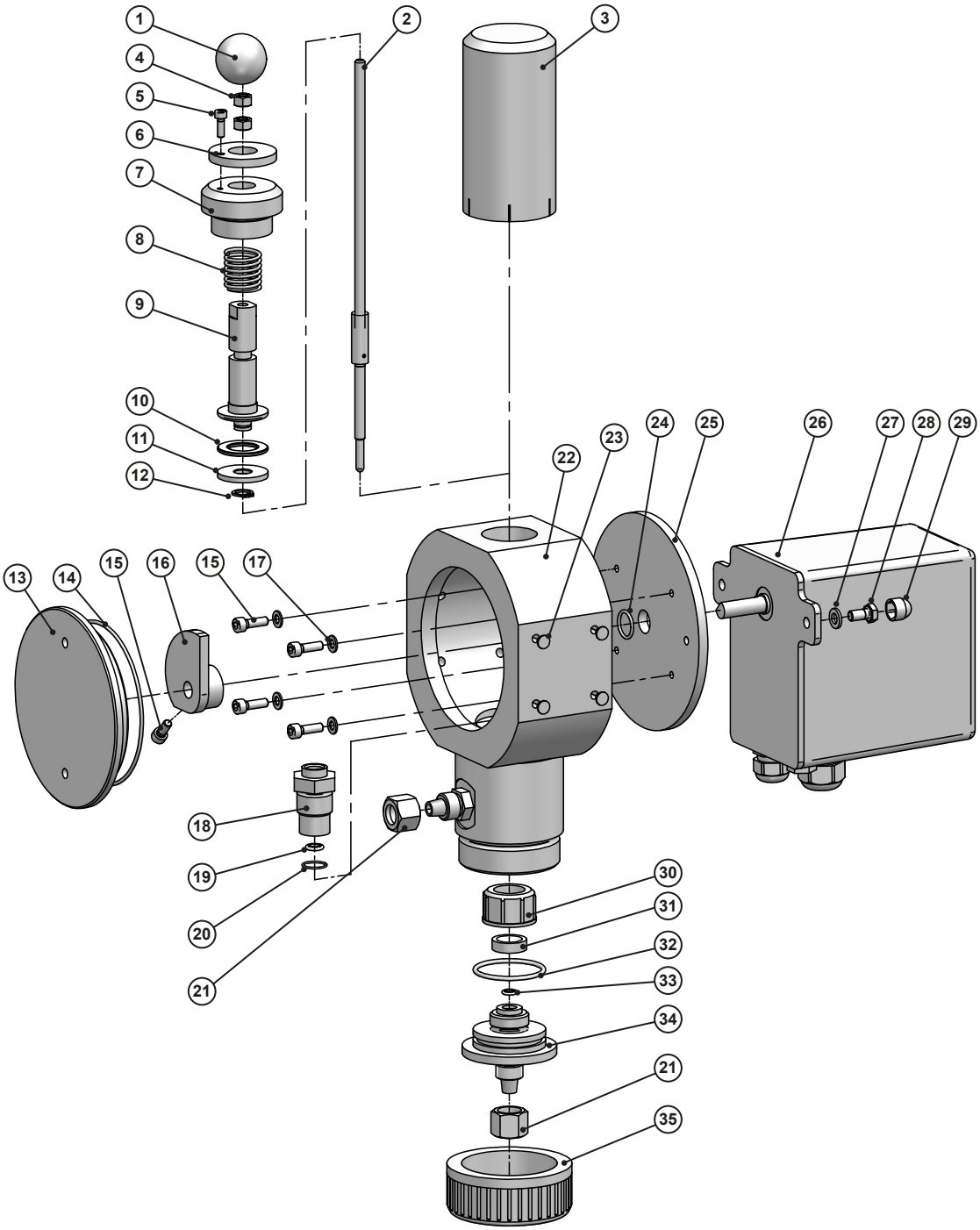

Fig. 20: Individual parts for C 7700 up to 2500 g/h

© Lutz-Jesco GmbH 2017

Position	No.	Description
1	1	Ball knob
2	1	Valve spindle complete
3	1	Cap
4	2	Nut M6
5	1	Screw M4x12
6	1	Washer Ø40
7	1	Guide nut
8	1	Compression spring
9	1	Guide bolt
10	1	Axial needle bearing
11	1	Washer Ø30
12	1	Retaining ring
13	1	Screw cap
14	1	O-Ring Ø95
15	5	Screw M5x12
16	1	Eccentric
17	4	U washer Ø5.3
18	1	Sealing bushing

Table 28: Individual parts for C 7700 up to 2500 g/h

Position	No.	Description
19	1	Seal set Ø6
20	1	O-Ring Ø13
21	2	Union nut Ø12
22	1	Housing
23	4	Cone plug
24	1	O-Ring Ø14
25	1	Mounting plate for servomotor
26	1	Servomotor
27	2	U washer Ø6.4
28	2	Screw M6x10
29	2	Protective cap
30	1	Cap nut G5/8
31	1	Seat holder
32	1	O-Ring Ø38
33	1	Seal set Ø4.6
34	1	Valve seat with hose connection
35	1	Cap nut G2

Table 28: Individual parts for C 7700 up to 2500 g/h

© Lutz-Jesco GmbH 2017
Subject to technical changes.
170518

15.2 Individual parts for C 7700 from 4 kg/h

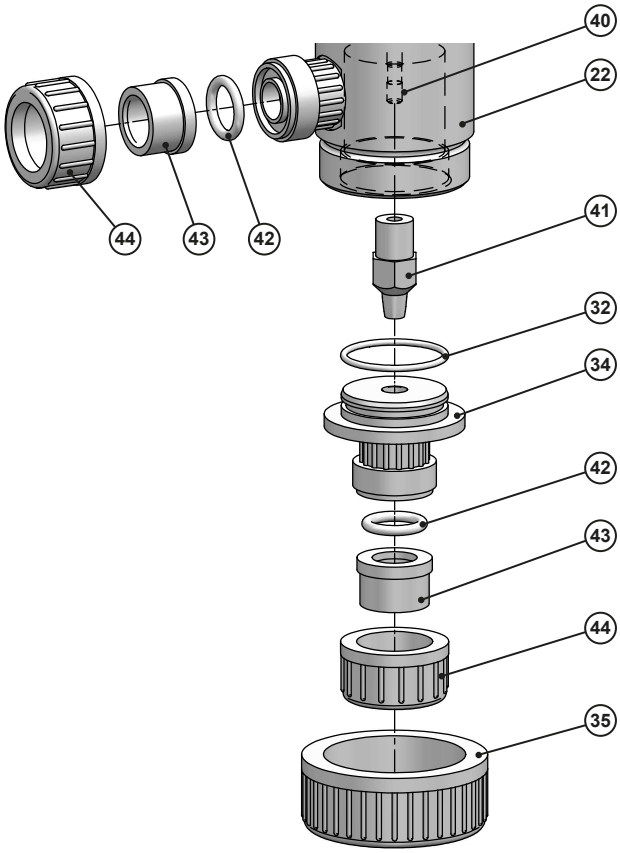

Fig. 21: Individual parts for C 7700 from 4 kg/h

Position	No.	Description
Position numbers that are not mentioned are identical with valves up to 2500 g/h		
22	1	Housing
32	1	O-ring (big)
34	1	Valve seat
35	1	Union nut (large)
40	1	Valve disc holder
41	1	Valve disc
42	2	O-ring (small)
43	2	Stick-on connector
44	2	Union nut (small)

Table 29: Individual parts for C 7700 from 4 kg/h

15.3 Maintenance sets

The following maintenance sets are suitable for the yearly maintenance.

Suitable for capacities	Content
80 g/h to 2500 g/h	■ All O-rings ■ 2 seal sets ■ Screws for servomotor and eccentric
4 kg/h to 25 kg/h	■ All O-rings ■ 1 seal set ■ Screws for servomotor and eccentric
40 kg/h to 200 kg/h	

Table 30: Maintenance sets

© Lutz-Jesco GmbH 2017

16 EU Declaration of Conformity

(DE) EU-Konformitätserklärung
Hiermit erklären wir, dass das nachfolgend bezeichnete Gerät aufgrund seiner Konzipierung und Bauart sowie in der von uns in Verkehr gebrachten Ausführung den einschlägigen grundlegenden Sicherheits- und Gesundheitsanforderungen der aufgeführten EG-Richtlinien entspricht. Bei einer nicht mit uns abgestimmten Änderung am Gerät verliert diese Erklärung ihre Gültigkeit.

(EN) EU Declaration of Conformity
We hereby certify that the device described in the following complies with the relevant fundamental safety and sanitary requirements and the listed EC regulations due to the concept and design of the version sold by us.
If the device is modified without our consent, this declaration loses its validity.

(FR) Déclaration de conformité UE
Nous déclarons sous notre propre responsabilité que le produit ci-dessous mentionné répond aux exigences essentielles de sécurité et de santé des directives CE énumérées aussi bien sur le plan de sa conception et de son type de construction que du modèle que nous avons mis en circulation.
Cette déclaration perdra sa validité en cas d'une modification effectuée sur le produit sans notre accord explicite.

(ES) Declaración de conformidad UE
Por la presente declaramos que, dados la concepción y los aspectos constructivos del modelo puesto por nosotros en circulación, el aparato mencionado a continuación cumple con los requisitos sanitarios y de seguridad vigentes de las directivas de la U.E. citadas a continuación.
Esta declaración será invalidad por cambios en el aparato realizados sin nuestro consentimiento.

(PT) Declaração de conformidade UE
Declaramos pelo presente documento que o equipamento a seguir descrito, devido à sua concepção e ao tipo de construção daí resultante, bem como a versão por nós lançada no mercado, cumpre as exigências básicas aplicáveis de segurança e de saúde das directivas CE indicadas.
A presente declaração perde a sua validade em caso de alteração ao equipamento não autorizada por nós.

Bezeichnung des Gerätes:	Regelventil
Description of the unit:	Control valve
Désignation du matériel:	Vanne régulatrice
Descripción de la mercancía:	Válvula de control
Designação do aparelho:	Válvula de controlo
Typ: **Type:**	C 7700
EG-Richtlinien: **EC directives:**	2006/42/EC, 2014/35/EU Die Schutzziele der Niederspannungsrichtlinie 2014/35/EU wurden gemäß Anhang I, Nr. 1.5.1 der Maschinenrichtlinie 2006/42/EG eingehalten. The protective aims of the Low Voltage Directive 214/35/EU were adhered to in accordance with Annex I, No. 1.5.1 of the Machinery Directive 2006/42/EC.
Harmonisierte Normen: **Harmonized standards:**	EN ISO 12100:2011-03, EN 61010-1:2011-07, EN 61000-6-2, EN 61000-6-3, EN 61000-3-2, EN 61000-3-3
Dokumentationsbevollmächtigter: **Authorized person for documentation:**	Lutz-Jesco GmbH

Heinz Lutz
Geschäftsführer / Chief Executive Officer
Lutz-Jesco GmbH
Wedemark, 01.05.2017

Lutz-Jesco GmbH
Am Bostelberge 19
30900 Wedemark
Germany

© Lutz-Jesco GmbH 2017
Subject to technical changes.
170518

17 Declaration of no objection

Please copy the declaration, stick it to the outside of the packaging and return it with the device.

Declaration of no objection

Please fill out a separate form for each appliance!

We forward the following device for repairs:

Device and device type: ..... Part-no.:.....

Order No.:..... Date of delivery: .....

Reason for repair: .....

.....

.....

Dosing medium

Description: ..... Irritating: ☐ Yes ☐ No

Properties: ..... Corrosive: ☐ Yes ☐ No

We hereby certify, that the product has been cleaned thoroughly inside and outside before returning, that it is free from hazardous material (i.e. chemical, biological, toxic, flammable, and radioactive material) and that the lubricant has been drained.

If the manufacturer finds it necessary to carry out further cleaning work, we accept the charge will be made to us.

We assure that the aforementioned information is correct and complete and that the unit is dispatched according to the legal requirements.

Company / address:..... Phone:.....

..... Fax:.....

..... Email:.....

Customer No.:..... Contact person: .....

Date, Signature:.....

© Lutz-Jesco GmbH 2017

18 Warranty claim

Warranty claim

Please copy and send it back with the unit!

If the device breaks down within the period of warranty, please return it in a cleaned condition with the complete warranty claim.

Sender

Company: ..... Phone: ..... Date: .....

Address: .....

Contact person: .....

Manufacturer order no.: ..... Date of delivery: .....

Device type: ..... Serial number: .....

Nominal capacity / nominal pressure: .....

Description of fault: .....

.....

.....

.....

.....

.....

.....

.....

Service conditions of the device

Point of use / system designation: .....

.....

.....

Accessories used (suction line etc.): .....

.....

.....

.....

.....

Commissioning (date): .....

Duty period (approx. operating hours): .....

Please describe the specific installation and enclose a simple drawing or picture of the chemical feed system, showing materials of construction, diameters, lengths and heights of suction and discharge lines.

© Lutz-Jesco GmbH 2017
Subject to technical changes.
170518

19 Index

B
Back-pressure regulator 14

C
Chlorine 5
Corrosion 5

D
Declaration of no objection 34
Design 9
Dimensioned drawings 12
Dimensions 12
Disposal of old equipment 25

E
EU Declaration of Conformity 33

F
Function description 9

G
General warnings 5

H
Handling instructions
  Marking 4
Hazards due to non-compliance with the safety instructions 6
Hose connection 16

I
Information about chlorine 5
Installation 13
  hydraulic 14
Installation example 17
Intended purpose 8
Intended use 8

L
Long-term shutdown 25

M
Maintenance 26
  Accessories 26
  Maintenance intervals 26
Maintenance accessories 26

N
Notes for the Reader 4

O
Operation 23
  Automatic operation 23
  Manual operation 23

P
Personal protective equipment 6
Personnel qualification 6
Personnel tasks 7
Product description 9
Product warranty 8

R
Rating plate 10

S
Safety 5
Scope of delivery 9
Seal connection 16
Short-term shutdown 25
Signal words
  Explanation 4
Spare parts 30
Specialist staff 6

T
Technical data 11
Trained electricians 6
Trained persons 6
Troubleshooting 29

V
Vacuum lines 14

W
Warnings
  General warnings 5
  Marking 4
Warning sign
  Explanation 4
Warranty claim 35
Working in a safety-conscious manner 6

 © Lutz-Jesco GmbH 2017