Chlorine ball-valve

Operating instructions

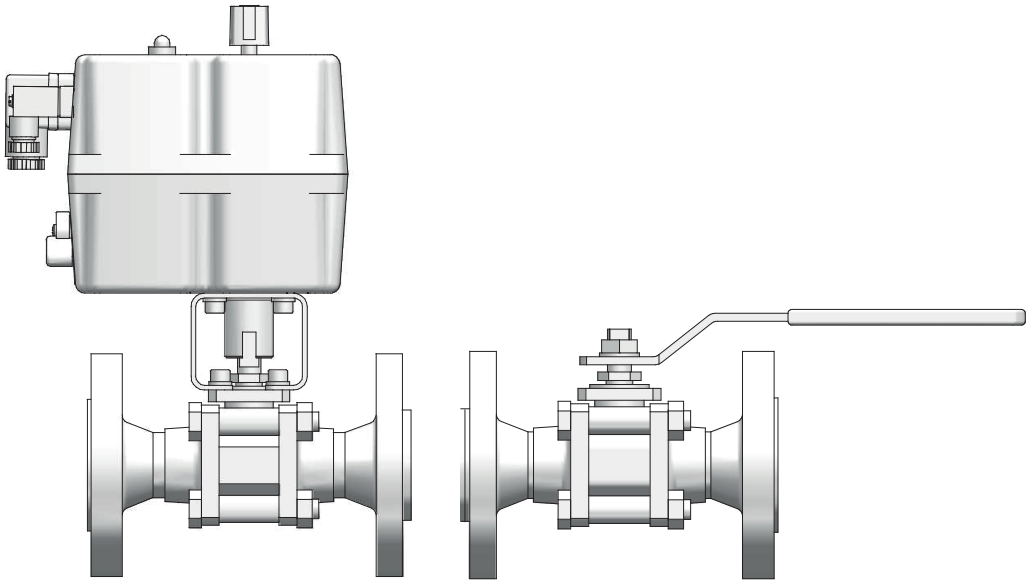

Read the operating manual!

The user is responsible for installation and operation related mistakes!

Original operating instructions

© Lutz-Jesco GmbH 2020

BA-22300-02-V04

Dosing Conveying Control | Liquids Gases Systems

Table of Contents

1 Notes for the Reader 4
1.1 General non-discrimination 4
1.2 Explanation of the signal words 4
1.3 Explanation of the warning signs 4
1.4 Identification of warnings 4

2 Safety 5
2.1 General warnings 5
2.2 Information about chlorine 5
2.3 Hazards due to non-compliance with the safety instructions 6
2.4 Working in a safety-conscious manner 6
2.5 Personal protective equipment 6
2.6 Personnel qualification 6

3 Intended use 7
3.1 Notes on product warranty 7
3.2 Intended purpose 7
3.3 Prohibited operating conditions 7
3.4 Prohibited dosing media 7

4 Product description 8
4.1 Scope of delivery 8
4.2 Design and function 8
4.3 Rating plate 9

5 Technical data 10
5.1 Technical data of the ball valve 10
5.2 Technical data of the drive 11

6 Dimensions 12
6.1 Ball valve dimensions 12
6.2 Dimensions of the ball valve with drive 13

7 Installation 14
7.1 Installation location 14
7.2 Assembling the ball valve 14
7.3 Retrofitting a drive to the ball valve 16
7.4 Connecting the drive 16
7.5 Completing the installation 17
7.6 Installation example 18

8 Commissioning 19
8.1 Check electric connection 19
8.2 Inspecting the pressure system 19

9 Operation 21
9.1 Operating the ball valve 21
9.2 Operating the ball valve with drive 21
9.3 Adjusting the drive 22
9.4 Shutting down in an emergency 24
9.5 Check intervals 24

10 Shutdown 25
10.1 Short-term shutdown 25
10.2 Long-term shutdown 25
10.3 Storage 25

11 Maintenance 25
11.1 Maintenance intervals 26
11.2 Maintenance accessories 26
11.3 Preparing the system for maintenance 26
11.4 Maintaining the ball valve 26
11.5 Function test of the drive 28
11.6 Finishing maintenance 28

12 Troubleshooting 29
12.1 Ball valve malfunctions 29
12.2 Malfunctions of the drive 29

13 Spare parts 30
13.1 Ball valve with handle 30
13.2 Drive with mounting hardware 32

14 Declaration of no objection 33

15 Warranty claim 34

16 Notes to conformity 35

17 EU Declaration of Conformity 36

18 Index 37

© Lutz-Jesco GmbH 2020
Subject to technical changes.
200714

1 Notes for the Reader

This operating manual contains information and behaviour rules for the safe and designated operation of the device.

Observe the following principles:

- read the entire operating instructions prior to inaugurating the device.
- Ensure that everyone who works with or on the device has read the operating manual and follows it.
- Maintain the operating manual throughout the service life of the device.
- Pass the operating manual on to any subsequent owner of the device.

1.1 General non-discrimination

In this operating manual, only the male gender is used where grammar allows gender allocation. The purpose of this is to make the text easy to read. Men and women are always referred to equally. We would like to ask female readers for understanding of this text simplification.

1.2 Explanation of the signal words

Different signal words in combination with warning signs are used in this operating manual. Signal words illustrate the gravity of possible injuries if the risk is ignored:

Signal word	Meaning
DANGER!	Refers to imminent danger. Ignoring this sign may lead to death or the most serious injuries.
WARNING	Refers to a potentially hazardous situation. Failure to follow this instruction may lead to death or severe injuries.
CAUTION!	Refers to a potentially hazardous situation. Failure to follow this instruction may lead to minor injury or damage to property.
PLEASE NOTE	Refers to a danger which, if ignored, may lead to risk to the machine and its function.

Tab. 1: Explanation of the signal words

1.3 Explanation of the warning signs

Warning signs represent the type and source of a danger:

Warning sign	Type of danger
	Danger to life from chlorine poisoning
	Danger to life due to electric shock
	General danger zone
	Danger of damage to machine or functional influences

Tab. 2: Explanation of the warning signs

1.4 Identification of warnings

Warnings are intended to help you recognise risks and avoid negative consequences.

This is how warnings are identified:

Warning sign	**SIGNAL WORD**

Description of danger.

Consequences if ignored.

⇨ The arrow signals a safety precaution to be taken to eliminate the danger.

Identification of action instructions

This is how pre-conditions for action are identified:

✓ Pre-condition for action which must be met before taking action.

🛠 A resource such as a tool or auxiliary materials required to perform the operating instructions.

This is how instructions for action are identified:

➔ Separate step with no follow-up action.

1. First step in a series of steps.

2. Second step in a series of steps.

▸ Result of the above action.

✓ **Action completed, aim achieved.**

© Lutz-Jesco GmbH 2020

2 Safety

2.1 General warnings

The following warnings are intended to help you eliminate the dangers that can arise while handling the device. Risk prevention measures always apply regardless of any specific action.

Safety instructions warning against risks arising from specific activities or situations can be found in the respective sub-chapters.

DANGER!

Danger to life from chlorine poisoning!

Chlorine is poisonous. In severe cases, breathing in chlorine may lead to death. It irritates the eyes, the respiratory system and the skin.

- ⇨ Install a gas warning device.
- ⇨ Use sufficient personal protective equipment.
- ⇨ When carrying out any work on the system, use a respirator mask with a Type B gas filter that complies with EN 14387.
- ⇨ Always comply with the accident prevention regulations that apply at the place of use.
- ⇨ Get rid of leaks without delay. You must get rid of even very minor leaks without delay. Together with the humidity, chlorine forms hydrochloric acid and corrosion results in rapidly increasing leakage.
- ⇨ Use only chlorine-resistant seals.
- ⇨ Only use seals once. Reusing them leads to leaks.

DANGER!

Increased danger to life from chlorine escape

If chlorine gas escapes, a filter mask is ineffective, since it is not a self-contained breathing apparatus.

- ⇨ If chlorine gas escapes, wear a Type 2 self-contained breathing apparatus that complies with EN 137.
- ⇨ In an emergency, shut down the system in accordance with section 9.4 “Shutting down in an emergency” on page 24.
- ⇨ Given a serious escape and insufficient equipment or qualifications, leave the work to professional emergency services personnel. Do not take any unnecessary risks.

WARNING

Increased risk of accidents due to insufficient qualification of personnel!

Chlorinators and their accessories must only be installed, operated and maintained by personnel with sufficient qualifications. Insufficient qualification will increase the risk of accidents.

- ⇨ Ensure that all action is taken only by personnel with sufficient and corresponding qualifications.
- ⇨ Prevent access to the system for unauthorised persons.

PLEASE NOTE

Damage to the plant due to the formation of hydrochloric acid

Chlorine gas is highly hygroscopic. This means that humidity enters the system at any open connection on devices or pipes, which results in the formation of hydrochloric acid and contamination. thus inevitably causing damage to the units.

- ⇨ Keep all connections (including in the vacuum system and on all devices not currently in use) closed at all times.

2.2 Information about chlorine

Chlorine is a hazardous substance. The chemical element chlorine is a greenish-yellow, toxic gas with a pungent odour, which can be detected in the air at concentrations below 1 ppm (= 1 ml/m³).

Chlorine is 2.5 times heavier than air and accumulates at ground level.

Chlorine is extremely toxic for water organisms. The reason for the toxicity of chlorine is its extraordinary reactivity. It reacts with animal and vegetable tissue and thus destroys it.

Air with a chlorine gas content of 0.5 -1% leads to a quick death in mammals and humans, as it attacks the respiratory tract and the pulmonary alveolus (formation of hydrogen chloride or hydrochloride acid).

PLEASE NOTE

Faults due to insufficient chlorine quality

Impurities in the chlorine gas form deposits in devices and valves and can attack the components chemically. This can lead to malfunctions.

- ⇨ Only use technically pure chlorine that meets the following requirements:
  - Mass content of chlorine at least 99.5%
  - Water content max. 20 mg/kg

  Chlorine that complies with EN 937 meets these requirements.

© Lutz-Jesco GmbH 2020
Subject to technical changes.
200714

2.3 Hazards due to non-compliance with the safety instructions

Failure to follow the safety instructions may endanger not only persons, but also the environment and the device.

The specific consequences can be:

- Failure of important functions of the device and of the corresponding system
- Failure of required maintenance and repair methods
- Danger to persons
- Danger to the environment caused by substances leaking from the system

2.4 Working in a safety-conscious manner

Besides the safety instructions specified in this operating manual, further safety rules apply and must be followed:

- Accident prevention regulations
- Safety and operating provisions
- Safety regulations on handling hazardous substances
- Environmental protection provisions
- applicable standards and legislation

2.5 Personal protective equipment

Based on the degree of risk posed by the dosing medium and the type of work you are carrying out, you must use corresponding protective equipment. Read the Accident Prevention Regulations and the Safety Data Sheets to the dosing media find out what protective equipment you need.

You will require the minimum of the following personal protective equipment:

Personal protective equipment required	
	Respirator mask
	Protective clothing
	Protective gloves
	Safety shoes

Tab. 3: Personal protective equipment required

Wear the following personal protective equipment when performing the following tasks:

- Installation
- Commissioning
- All work on gas-bearing sections of the plant
- Changing the chlorine tank
- Shut-down
- Maintenance work
- Disposal

2.6 Personnel qualification

Any personnel who work on the device must have appropriate special knowledge and skills.

Anybody who works on the device must meet the conditions below:

- Attendance at all the training courses offered by the owner
- Personal suitability for the respective activity
- Sufficient qualification for the respective activity
- Training in how to handle the device
- knowledge of safety equipment and the way this equipment functions
- Knowledge of this operating manual, particularly of safety instructions and sections relevant for the activity.
- Knowledge of fundamental regulations regarding health and safety and accident prevention

All persons must generally have the following minimum qualification:

- Training as specialists to carry out work on the device unsupervised
- Sufficient training that they can work on the device under the supervision and guidance of a trained specialist

These operating instructions differentiate between these user groups:

2.6.1 Specialist staff

Thanks to their professional training, knowledge, experience and knowledge of the relevant specifications, specialist staff are able to perform the job allocated to them and recognise and/or eliminate any possible dangers by themselves.

2.6.2 Trained electricians

Due to their professional training, knowledge and experience as well as knowledge of specific standards and provisions, trained electricians are able to do the electrical work assigned to them and to recognise and avoid any potential dangers by themselves.

They are specially trained for their specific working environment and are familiar with relevant standards and provisions.

They must comply with the legally binding regulations on accident prevention.

2.6.3 Trained persons

Trained persons have received training from the operator about the tasks they are to perform and about the dangers stemming from improper behaviour.

Trained persons have attended all trainings offered by the operator.

© Lutz-Jesco GmbH 2020

2.6.4 Personnel tasks

In the table below you can check what qualifications are the pre-condition for the respective tasks. Only people with appropriate qualifications are allowed to perform these tasks!

Qualification	Activities
Specialist staff	■ Transportation ■ Assembly ■ Hydraulic installations ■ Commissioning ■ Control ■ Taking out of operation ■ Fault rectification ■ Maintenance ■ Repairs ■ Disposal
Trained electricians	■ Electrical installation ■ Rectifying electrical faults ■ Electrical repairs
Trained persons	■ Storage

Tab. 4: Personnel qualification

3 Intended use

3.1 Notes on product warranty

Any non-designated use of the device can impair its function and the protection provided. This leads to invalidation of any warranty claims!

Please note that liability is on the side of the user in the following cases:

- The product is operated in a manner that is not consistent with these operating instructions, in particular with the safety instructions, handling instructions and intended purpose.
- if people operate the product who are not adequately qualified to carry out their respective activities.
- No original spare parts or accessories of Lutz-Jesco GmbH are used.
- Unauthorised changes are made to the product by the user.
- The user uses different dosing media than those indicated in the order.

3.2 Intended purpose

The chlorine ball valve described below is used for shutting-off a pipe, which carries liquid or gaseous chlorine. The use of the valve as a control valve does not comply with the intended purpose.

3.3 Prohibited operating conditions

- The product is only intended for the applications according to Section 3.2 "Intended purpose".
- The details regarding the operating conditions according to the "Technical data" (page 10) must be observed.
- The product must not be operated if protective equipment has been removed or has not been properly installed or is not fully functional.

3.4 Prohibited dosing media

The device must not be used for the following media and substances:

- All media apart from liquid and gaseous chlorine.
- Not technically pure chlorine with a mass content of less than 99.5%.

© Lutz-Jesco GmbH 2020
Subject to technical changes.
200714

4 Product description

4.1 Scope of delivery

Please compare the delivery note with the scope of delivery. The following items are part of the scope of delivery:

- Ball Valve
- Assembly accessories for flanges DN 25 / PN 40 (optional)
- Operating instructions

4.2 Design and function

The ball valve is a shut-off device that uses a pierced ball (1) as the shut-off body. The fitting is designed with a floating ball. This means that the connection between the ball and the control rod (2) is "loose" so that the ball can press itself into the seal (3) in the closed valve position by the medium pressure alone without exercising any pressure on the control rod.

The control rod opens and closes the ball valve. The control rod is operated either via a manual handle (figure 1) or an electrical drive / actuator (figure 2). The connection between the ball valve and pipeline is made with a housing flange (5). This flange is attached to the ball valve in order to provide a connection for drives or stop pins (6), which are to limit the switch travel.

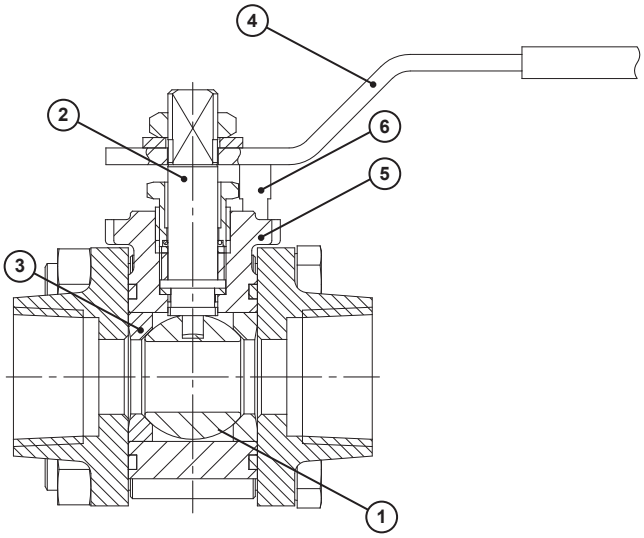

Fig. 1: Ball valve with internal thread

Furthermore, ball valves are categorised by the diameter of the ball bore. If the diameter of the ball bore corresponds to the nominal width (DN) of the connected pipe, the ball valve is called a ball valve with full passage. If the ball bore is smaller by one nominal width step, the ball valve is called a ball valve with reduced passage. Ball valves with reduced passage have the advantage that they require a smaller torque for actuating the control rod compared to ball valves with full passage. Table 5 shows the required and maximum permitted actuating torques for brand new ball valves depending on the nominal width of the connected pipe. With the exception of ball valves for very small nominal widths (*), all ball valves, to which these operating instructions apply, have a reduced passage.

Actuating torques		
DN	**required**	**Maximum permitted**
8*	6	40
15	7	40
20	11	60
25	17	60

Tab. 5: Actuating torques for ball valves

> In order to take certain influences, such as contamination or ageing of the ball valve, into consideration, we recommend an actuating torque of 1.5 times the required torque value.

The ball valve has a housing flange (4) for the fastening of stop pins (5), whose task is to limit the switch travel, or for the connection of drives.

> The connection dimensions for drives depend on the nominal width of the ball valve (see Tab. 9 in Section 6 "Dimensions").

Possible drives are electrical swivel drives. The drive (1) is connected with the ball valve (4) via a metal bridge (2) and an adapter (3). Figure 2 shows such a ball valve.

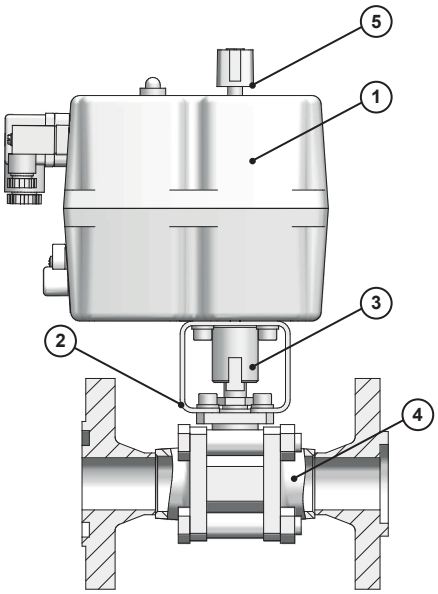

Fig. 2: Ball valve with drive

The swivel drive is fitted with a manual emergency gear. In the event of a power cut, the control rod can be manually operated using a handle (5). An operating mode selector lever (6) for toggling between automatic operation (AUTO) and manual operation (MAN) is located on the drive side.

© Lutz-Jesco GmbH 2020

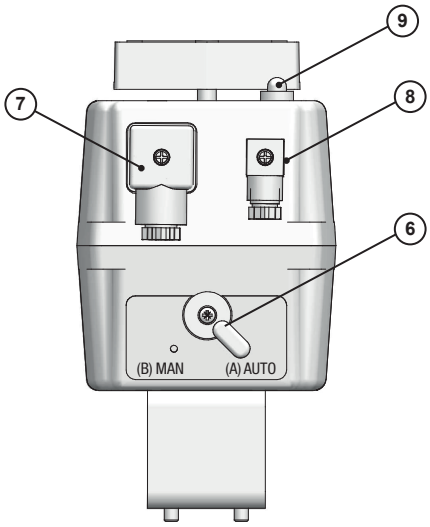

Fig. 3: View of the connectors

Also on the drive side are the connectors for the power supply (7) of the drive and the end position (limit) feedback (8). An operating light (9) indicates the operational readiness of the drive or the activation of the manual operation.

As an option, the swivel drive can be fitted with a rechargeable battery system. In the event of a power cut, the drive moves the ball valve into the closed position using the battery power supply. The battery including the charger electronics is already integrated in the drive housing.

PLEASE NOTE

The failure of the battery system

The battery system can only work if the battery has been charged. Always charge the battery before commissioning the drive. (For information about the charging time please refer to Section 5 "Technical data".)

⇨ Make sure that the motor is also supplied with voltage in the closed position. The battery charges in both positions.

Only in AUTOMATIC OPERATION does the battery move the ball valve into the closed position.

4.3 Rating plate

4.3.1 Ball Valve

The ball valve does not have a rating plate. Instead, the following details have been punched into its metal body:

- Material number of the housing flanges
- Material number of the housing body
- Designation of the series
- Maximum permissible pressure
- Nominal width of the ball valve
- Serial number
- Year of built

4.3.2 Drive unit

The drive has a rating plate with information about the safety and functionality of the product. The rating plate must be kept legible for the entire service life of the product.

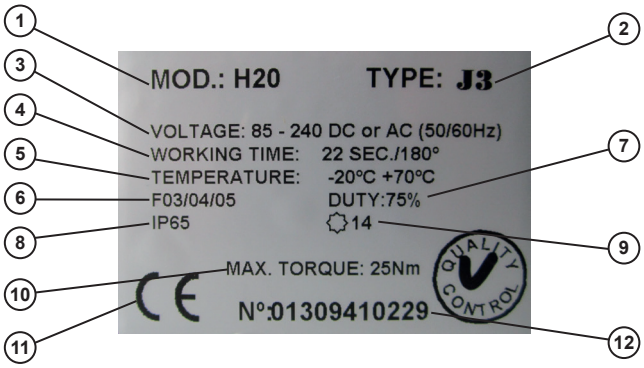

Fig. 4: Drive rating plate

No.	Description
1	Model (is composed of the voltage variant and operating torque in Nm)
2	Details regarding the series
3	Voltage range
4	Actuating time
5	Temperature range
6	Details regarding the possible flange variants for the design acc. to DIN EN ISO 5211
7	Start-up time (100 % = 10 minutes)
8	Protection class
9	Details regarding the support's female square in mm
10	Maximum torque (not the operating torque)
11	CE marking
12	Serial number

Tab. 6: Drive rating plate

© Lutz-Jesco GmbH 2020
Subject to technical changes.
200714

5 Technical data

5.1 Technical data of the ball valve

Information			Value
Connection type	DN8 – DN25		Internal thread
	DN25		Flange with groove and spring according to EN 1092 shape C and D
Operating pressure			PS 40
Max. pressure			PS 100
Materials	Housing		Steel (1.0436)
	Ball		Monel 400
	Control rod		Steel (1.4404), monel (optional)
	Housing seal		PTFE
	Ball seat		PTFE with 25 % glass
Ambient temperature		°C	0 to 60
Weight	DN8	kg	0.75
	DN15	kg	0.95
	DN20	kg	1.7
	DN25 (thread)	kg	2.3
	DN25 (flange)	kg	4.5

Tab. 7: Technical data of the ball valve

© Lutz-Jesco GmbH 2020

5.2 Technical data of the drive

Description			Value
Flange connection acc. to DIN EN ISO 5211			F 03 – F 05
Torque	Operation	Nm	20
	Maximum	Nm	25
Actuating time for 90° without load		s	11
Voltage		V AC/DC	85 – 240
Current consumption:		A	0.01 – 0.21
Protection class			IP65
Start-up time		%	75
Temperature range		°C	-20 to +50
Load capacity of the limit switch			250 V AC, 3 A
Rechargeable battery system (optional)	Service life		250 – 300 journeys or 3 - 5 years
	Maximum number of runs before recharging is required		5
	Charging time after battery run	min	8
	Charging time before commissioning	h	28
	Battery capacity	mA	100
	Consumption (driving)	W	6.2
	Current consumption (charging)	mA/h	40
Weight	Without battery	kg	1.4
	With battery	kg	1.6

Tab. 8: Technical data of the drive

© Lutz-Jesco GmbH 2020
Subject to technical changes.

6 Dimensions

All dimensions in mm

6.1 Ball valve dimensions

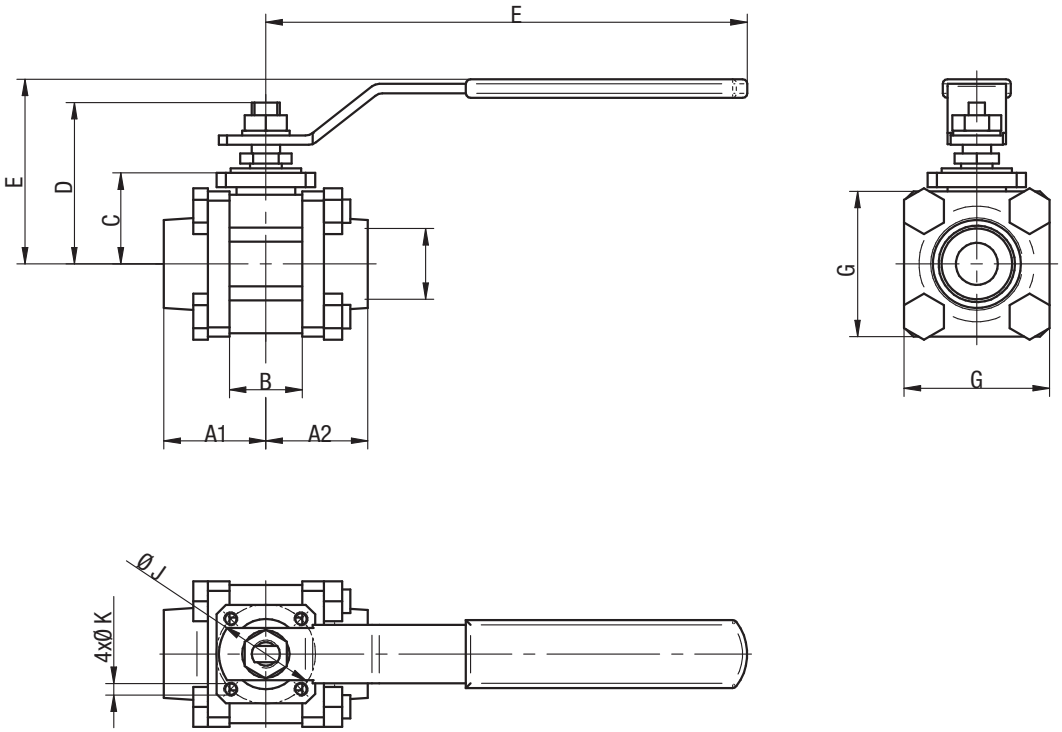

Fig. 5: Dimensional drawing of the ball valve with internal thread (without stop pins)

Nominal width	DN 8	DN 15	DN 20	DN 25
Dim. A1	33	33	36.5	43.5
Dim. A2	33	33	36.5	43.5
Dim. B	22	22	25	31
Dim. C	29	29	31	38.5
Dim. D	57	57	60	70
Dim. E	69	69	72	81
Dim. F	155	155	155	205
Dim. G	45	45	50	62
Internal thread H	1/4" NPT	1/2" NPT	3/4" NPT	1" NPT
Flange code pursuant to DIN EN ISO 5211	F03	F03	F03	F04
Dim. Ø J	36	36	42	42
Dim. Ø K	M6	M6	M6	M6

Tab. 9: Dimensions of the ball valve with internal thread (without stop pins)

 © Lutz-Jesco GmbH 2020

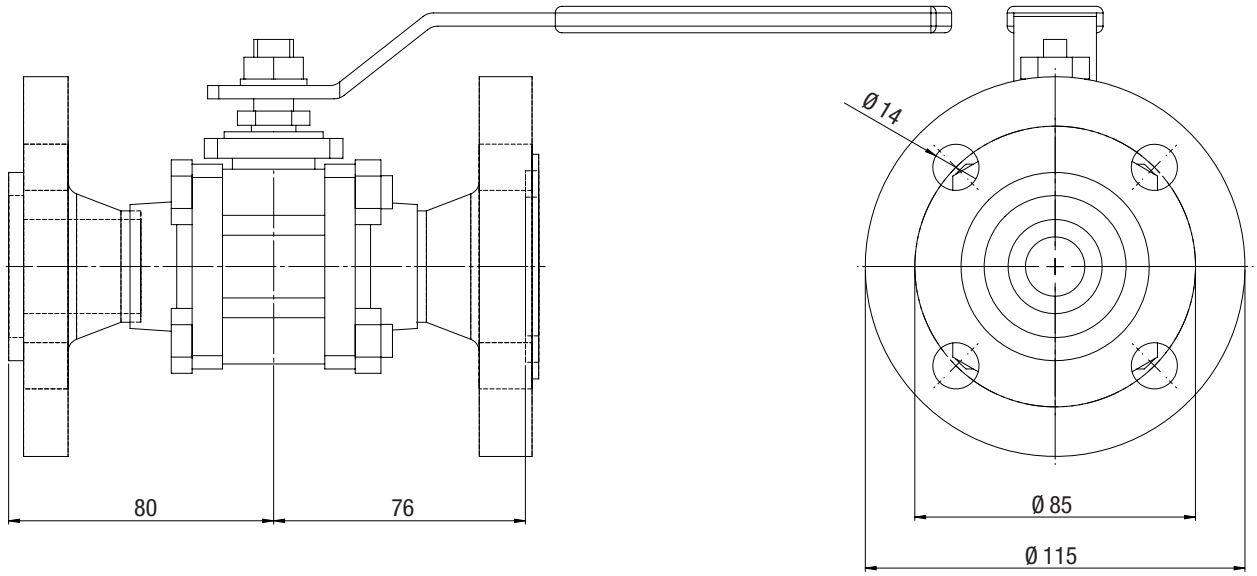

Fig. 6: Dimensional drawing of the ball valve with flange (without stop pins)

6.2 Dimensions of the ball valve with drive

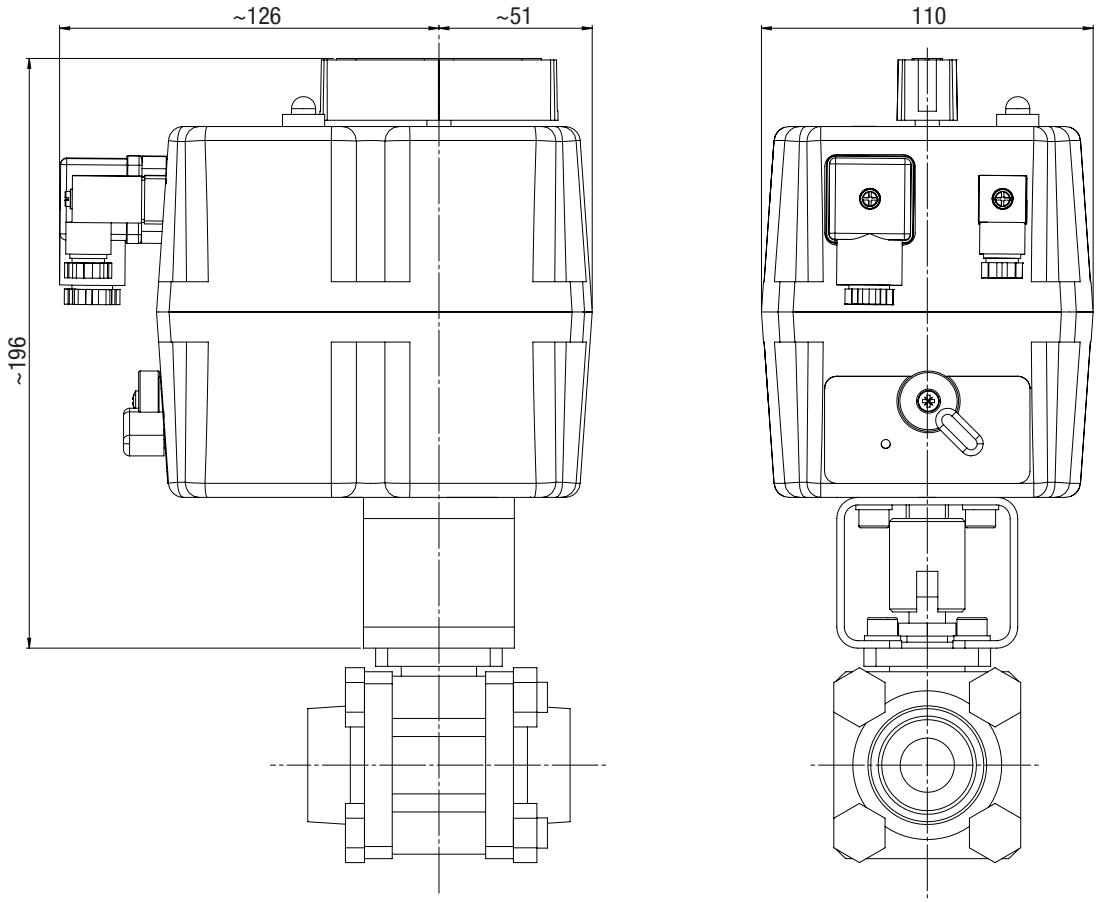

Fig. 7: Dimensional drawing of the ball valve with internal thread and drive

7 Installation

DANGER!

Danger from too high a pressure!

Under the influence of heat, liquid chlorine expands considerably. An impermissible high pressure can occur if a pipe line or a system component is filled with liquid chlorine and all inputs and outputs are closed. This can cause system parts to burst, causing chlorine to escape.

⇨ In each section of the system where liquid chlorine can be trapped, install an expansion system.

⇨ In this case, relief may only be performed into a safe environment, e.g. in an expansion tank made of steel. The container should be brand-new and must be capable of accommodating at least 20 % of the line volume.

DANGER!

Danger to life from chlorine poisoning!

Chlorinators without gas warning devices are an increased safety risk, since it is not possible to detect escaping chlorine gas in good time or at all.

⇨ Install a gas warning device.

WARNING

Increased risk of accidents due to insufficient qualification of personnel!

Chlorinators and their accessories must only be installed, operated and maintained by personnel with sufficient qualifications. Insufficient qualification will increase the risk of accidents.

⇨ Ensure that all action is taken only by personnel with sufficient and corresponding qualifications.

⇨ Prevent access to the system for unauthorised persons.

PLEASE NOTE

Damage to the system due to incorrect installation

The failure to observe installation instructions (e.g. use of unsuitable tools, incorrect torque) can damage the system parts.

⇨ Use suitable tools.

⇨ Note the specified torque.

7.1 Installation location

The room must fulfil the following minimum requirements:

- Secured against access by unauthorised persons
- Protected against weather conditions
- Protected against frost
- Protected against exposure to direct sunlight
- permissible ambient temperature adhered to (see Section 5 "Technical data"),
- room of sufficient size to allow trouble-free assembly as well as inspection and maintenance of the device at all times,
- Good ventilation of the room
- The room must comply with the locally valid prescriptions.

7.2 Assembling the ball valve

The flow direction can be freely chosen. It may be necessary to adjust the position of the stop pins on the housing flange for ball valves with a handle. The equipment is supported by the pipeline. Ensure that the pipeline is adequately secured. The mechanical assembly is identical for all versions. However, it differs with regard to the connection type.

The following pre-conditions for action must always be fulfilled:

✓ When routing the pipelines to the ball valves make sure that they are free from tension.

✓ The inside of the pipes and ball valve are clean and dry.

7.2.1 Assembly using a flange connection

PN40 flanges with a groove and spring according to EN 1092, shape C and D, are fitted to the ends of the ball valve. The appropriate counter-flanges must be used in order to make the flange connections.

Pre-conditions for actions:

✓ The transport protection of the equipment is removed.

✓ The flange sealing faces are free from contamination and damage.

✓ The flange seals must be clean, undamaged and dry.

✓ Bolts, nuts and washers are clean and undamaged.

✓ The distance between the pipe flanges equals the length of the ball valve.

✓ The ball valve is fully open.

Any bolts, nuts and washers that are removed during installation must be replaced with new ones. Used bolts, nuts and washers may only be installed if they are in new condition.

© Lutz-Jesco GmbH 2020

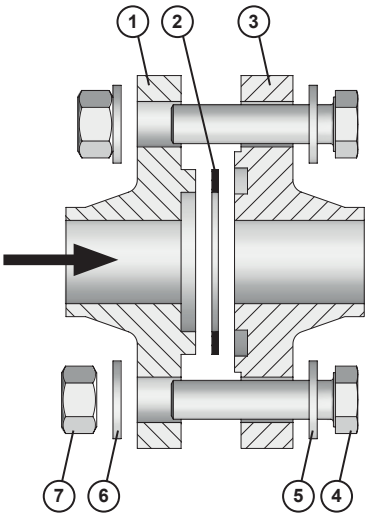

Fig. 8: Installing the flange connection

Perform the following working steps:

1. Lubricate the sliding faces and thread of bolts, nuts and washers e.g. using fitting grease or PTFE grease.
2. Place the flat seal (2) into the groove of the connection flange (3). Assemble the seal in dry condition.
3. Mount the tongue flange (1). Make sure that the flat gasket (2) does not slip.
4. Fit the bolts (4), washers (5, 6) and nuts (7) by hand.
5. Tighten the bolts evenly alternately crosswise in three stages: 20 Nm, 35 Nm, 50 Nm. After this, retighten all the bolts to the full target tightening torque (50 Nm).
6. Setting the seal (adapting to the flange seal surface) can make it necessary to retighten the bolts. For this reason, retighten the bolts to 50 Nm after a few hours.

✓ **Flange connection assembled**

7.2.2 Assembly using a threaded connection

> Organic sealing materials must not be used for assembling the fittings and pipes. For this purpose, only Teflon tape or specially approved sealing agents (such as anaerobic sealing compounds) may be used.

Precondition for action:

✓ The transport protection is removed.

✓ The threads are metallic bright.

Perform the following working steps:

1. Clean the thread with a fat-dissolving cleaning agent, e.g. alcohol.
2. Allow the thread to dry completely.
3. Apply the thread sealant to the external thread in a circular motion to the start of the thread. Leave the first thread clear. Apply the thread sealant all the way down to the root of the thread to thoroughly grease the thread flank.

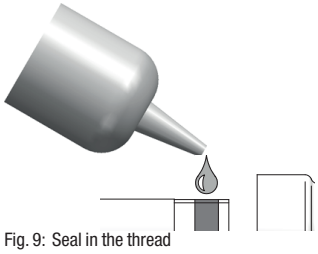

Fig. 9: Seal in the thread

4. Insert the threaded pin into the internal thread and apply a little thread sealant to the internal thread.
5. Screw the parts by hand.

thread	Tightening torque
1/4" NPT	up to 50 Nm
1/2" NPT	up to 100 Nm
1" NPT	up to 150 Nm

Tab. 10: Tightening torques for threaded connections

6. Remove excess thread sealant with a cloth.

PLEASE NOTE

Leakage due to incorrect installation

To ensure that the connection is correctly aligned, it is necessary under certain circumstances to turn the thread anticlockwise. When the connection is loosened, bubbles form in the adhesive, which can lead to leakages.

⇨ Only turn the thread anti-clockwise.

⇨ If the orientation is not correct after the connection has been tightened, repeat steps 1 – 5.

7. Allow the bond to harden for at least 12 hours prior to the leak test.

✓ **The pipeline with a threaded connection has been assembled.**

© Lutz-Jesco GmbH 2020
Subject to technical changes.
200714

7.3 Retrofitting a drive to the ball valve

At the point of delivery, the drive is already pre-installed at the ball valve. However, there is an option of retrofitting a drive to a manual ball valve. In order to do this, the handle and stop pins must be removed.

When selecting the drive, the technical data of the ball valve (see Section 5) and the drive manufacturer's instructions must absolutely be observed.

7.4 Connecting the drive

WARNING

Danger of electric shock!

Live parts can inflict fatal injuries.

⇨ Work of whatever kind on the drive may only be carried out by qualified personnel and only after the power supply to the equipment has been disconnected.

⇨ All local laws and regulations must be observed when selecting the mains power cables.

PLEASE NOTE

Damage due to incorrect mains voltage

The drive will get damaged if you connect it to the incorrect mains voltage.

⇨ Observe the information about the mains supply that is given on the drive's rating plate.

Please observe the following points when connecting the drive:

- The drive must be single-phase connected.
- Make sure that the left-hand rotation and right-hand rotation of the drive are not activated at the same time.
- This must be guaranteed by providing an external fuse.
- Electrical consumers must not be switched parallel to the drive.

7.4.1 Mechanical connection of the supply line and control line

The provided DIN connectors must be used for connecting the drive. When making the connection, make sure that you observe the correct cable cross-section (see table 13) in order to ensure leak-tightness.

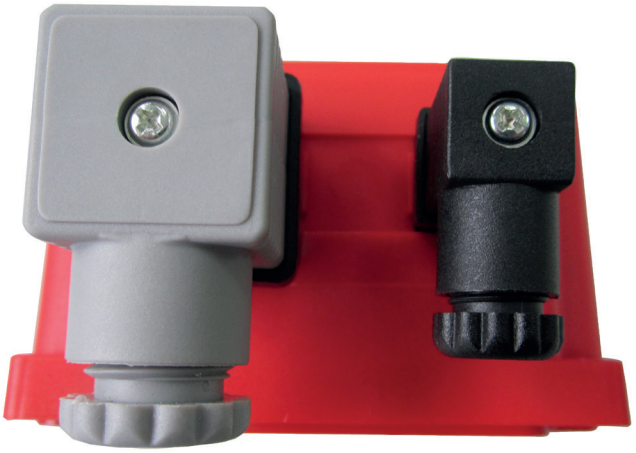

Fig. 10: DIN connectors

Connector colour /size	Use	Min/max cable cross-section
Grey/large	Voltage supply	Ø 8 –10.5 mm
Black/small	End position feedback	Ø 5 mm

Tab. 11: Cable diameter

Perform the following working steps:

1. Remove the connector's fixing screw (5).
2. Open the connector by pulling the terminal block (2) out of the housing (4).
3. Insert the cable that is to be connected into the cable screw connection (7) at the housing (4).
4. Connect the cable according to the wiring diagram.

✓ **Drive connected**

© Lutz-Jesco GmbH 2020

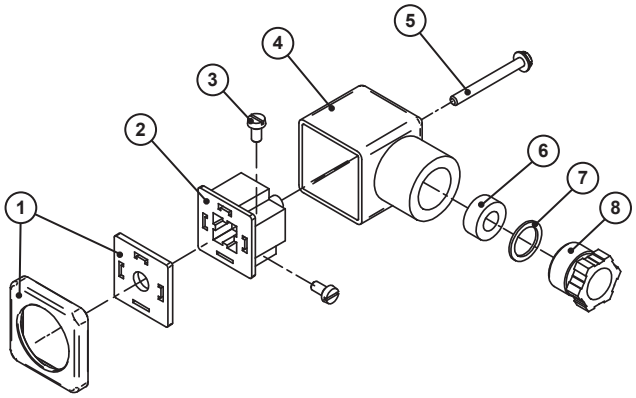

Fig. 11: Exploded view of a DIN connector

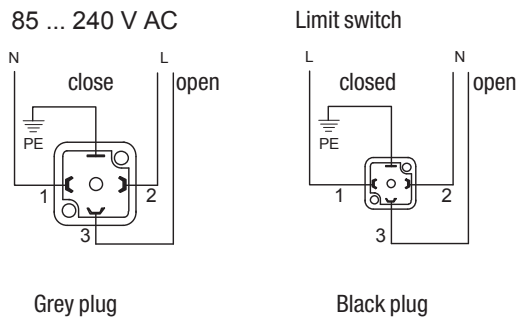

Fig. 12: Circuit diagram

Position	Description
1	Seal
2	Terminal block
3	Cable clamp
4	Housing
5	Fixing screw
6	Seal
7	Washer
8	Cable connection

Tab. 12: Key of the DIN connector

Electrical connection of the supply line and control line

Perform the following working steps:

1. Loosen the screws of the connectors and remove the connectors.
2. Connect the supply line and control line according to the wiring diagram.

> The wiring diagram is shown on the housing opposite the DIN connectors.

7.5 Completing the installation

After the installation has been completed, you need to check that all the connections are leak-proof (see 8.2 "Checking the pressure system" on page 19).

Furthermore, all cable screw connections must be securely tightened to guarantee the IP protection class.

7.6 Installation example

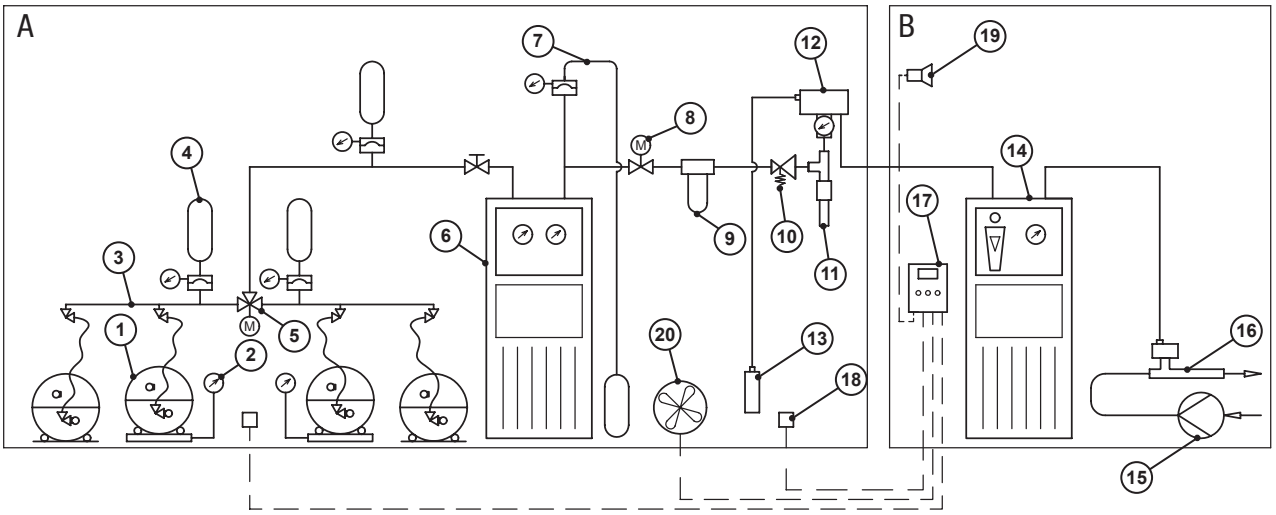

Fig. 13: Installation with a chlorine evaporator

Position	Description
A	Room for the chlorine supply
B	Dosing device room
1	Chlorine barrel
2	Chlorine barrel scale
3	Manifold
4	Expansion system for piping
5	Changeover switch
6	Chlorine evaporator
7	Expansion system for chlorine evaporator
8	Automatic ball valve
9	Chlorine gas filter

Position	Description
10	Pressure reducing valve
11	Moisture eliminator with heating collar
12	Vacuum regulator
13	Activated carbon cartridge
14	Dosing device
15	Motive water pump
16	Injector with non-return valve
17	Gas warning device
18	Gas sensor
19	Horn
20	Entrance port of the chlorine eliminator

Tab. 13: Designation of components

© Lutz-Jesco GmbH 2020

8 Commissioning

Precondition for action:

✓ The installation has been carried out correctly.

8.1 Check electric connection

This only applies to ball valves with a drive.

Check that all electrical connections are correctly installed.

8.2 Inspecting the pressure system

WARNING

Increased risk of accidents due to insufficient qualification of personnel!

If the leak-tightness check is not carried out correctly, leakage may occur or the system may even get destroyed.

⇨ Ensure that all action is taken only by personnel with sufficient and corresponding qualifications.

⇨ Prevent access to the system for unauthorised persons.

⇨ Wear a respirator mask.

Check the pressure system from the chlorine tank to the gas dosing system for leak-tightness in two stages:

1. Leak test with nitrogen,
2. Leak test with chlorine.

8.2.1 Carrying out the leak test with nitrogen

You are strongly recommended to carry out this inspection before carrying out the leak test with chlorine, since it shows leaks in the pressure system without the risk of chlorine escaping. As an alternative, you can carry out the inspection using dry compressed air.

Precondition for action:

✓ All the open connections of the pressure system were closed correctly.

✓ All the shut-off valves in the pipe system were opened.

✓ A nitrogen cylinder with a pressure reducer (0 – 25 bar) has been connected.

Resources required:

🛠 Soap solution or leak detection spray

Perform the following working steps:

1. Close the nitrogen cylinder's valve.
2. Apply soap solution to all the potential leaks.
   ▶ Bubbles form at leak locations (with a possible time delay).
3. Close the outlet on the nitrogen cylinder's pressure reducer and observe the pressure gauge in the installation.
   ▶ The pressure must not drop within one hour.
4. Repair the leak. Allow any adhesive surfaces to harden sufficiently and repeat the leak test with nitrogen.

PLEASE NOTE

Leakage at the control rod of the ball valve

If the control rod shows any leakage, it can be made leak-proof by readjusting the control rod seal.

⇨ Perform the following working steps 5 – 7.

5. Retighten the gland nut using a suitable tool by turning it clockwise for 1/4 rotation. Observe the tightening torques for glands in table 16.
6. Repeat this process until the control rod seal is leak-proof.
7. Make sure that the ball valve can still be actuated easily without any need for force.

DN	Tightening torque
DN8	10 Nm
DN15	10 Nm
DN 20	20 Nm
DN 25	25 Nm

Tab. 14: Tightening torques for gland nuts

If it proves impossible to correct the leakage at the control rod by readjusting the control rod seal, the control rod seal and the gland must be replaced (see Section "Replacing the control rod seal" on page 27).

✓ **Leak test with nitrogen carried out.**

© Lutz-Jesco GmbH 2020
Subject to technical changes.
200714

8.2.2 Carrying out the leak test with chlorine gas

DANGER!

Danger to life from chlorine poisoning!

If you start the leak test with chlorine gas before the entire system has been installed and the injectors are ready for operation, chlorine gas may not be extracted immediately in the event of a leak.

⇨ Make sure that all the components in the plant are installed correctly and the injectors are ready for operation before starting the leak test with chlorine gas.

⇨ Put on protective clothing before carrying out the leak test with chlorine gas.

Precondition for action:

✓ The leak test with nitrogen has been carried out successfully.

✓ All the open connections of the pressure system were closed correctly.

✓ All shutoff valves in the piping system have been closed.

✓ A chlorine tank has been closed (at the gas take-off of the chlorine tank).

✓ The injector is ready for operation.

Resources required:

🛠 Cylinder with ammonia solution

Perform the following working steps:

1. Briefly open the chlorine container valve and close it again.
2. Open the first valve in the pipe line, starting from the chlorine tank.
3. Carry out the ammonia test at the pipeline section up to the first closed valve: Hold an open bottle containing the ammonia solution close to the pipe and make slight pumping motions with the plastic bottle. Ammonia steam with chlorine forms a white vapour and makes even very small leaks visible.

PLEASE NOTE

Damage to the plant by the ammonia solution

If the ammonia solution comes into contact with the plant, this leads to corrosion on the equipment.

⇨ Make sure that you do not spill any ammonia.

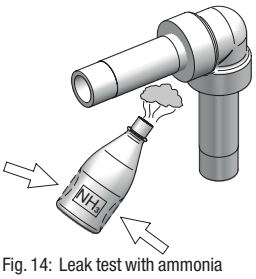

Fig. 14: Leak test with ammonia

4. Open additional downstream valves in the pipe line in sections. In each case, let a little chlorine gas into the system and close the valves again. Then carry out the ammonia test at this pipe line section and the associated fittings. Proceed in this manner until all piping and fittings have been tested for leaks.

If you find leaks:

1. Close the chlorine tank valve.
2. Use the injector to suck off the remaining chlorine.
3. Operate the chlorination installation for approx. 5 minutes with nitrogen or dry compressed air at approximately 5 bar.
4. Switch off the injector at the booster pump.
5. Repair the leak. Allow any adhesive surfaces to harden sufficiently and repeat the leak test.

If you do not find any leaks:

1. Close the chlorine tank valve.
2. Depressurise the system using the injector to evacuate the piping.
3. Switch off the injector at the booster pump.

✓ **Leak test with chlorine gas completed.**

© Lutz-Jesco GmbH 2020

9 Operation

DANGER!

Chlorine gas can escape due to systems that are leaky or not installed correctly!

Chlorinators constitute an increased safety risk if they have not been properly installed, if an adequate leak test has not been performed or if the devices are not in good condition.

- ⇨ Before placing the system into operation, have it checked by technical personnel to ensure that it is in the proper condition and leaktight.
- ⇨ The condition of the installation must be checked for adequate tightness on a regular basis.
- ⇨ Ensure that all action is taken only by personnel with sufficient and corresponding qualifications.

If the handle is removed, the dihedron indicates the status. (The tap is open when the dihedron is parallel to the pipe axis.)

WARNING

Danger of personal injury and material damage!

If the chlorine gas flow through the ball valve is restrained, the subsequent expansion into the connected pipe will result in a drop of the chlorine gas temperature. The temperature can drop to a point when the chlorine gas will condense.

This means that downstream system parts, which are only designed for the use of chlorine gas, are damaged and that leakage may occur.

- ⇨ Only use the ball valve for fully opening or closing the pipes.

9.1 Operating the ball valve

The ball valve does not require any special operating technique. The valve can be opened or closed fully by moving the control rod, for example with the handle (handle parallel to the pipe axis = open, handle perpendicular to the pipe axis = closed). We do not recommend that you use any intermediate handle position.

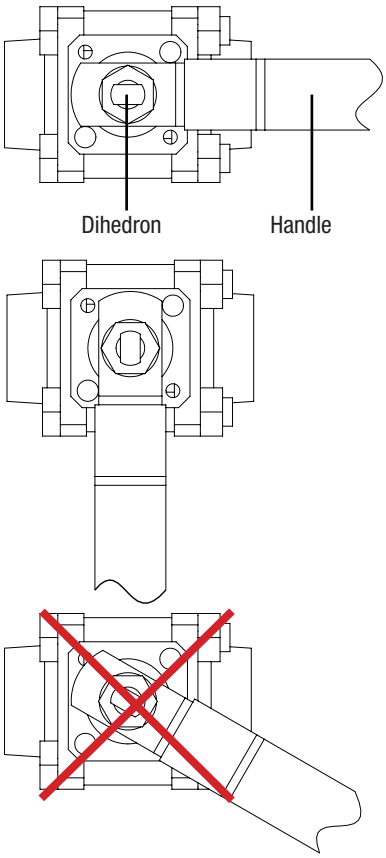

Fig. 15: Ball valve positions (top = open, centre = closed, bottom = intermediate position)

9.2 Operating the ball valve with drive

9.2.1 Operating modes

Automatic operation

In automatic operation, the drive moves the ball valve to the "fully open" or "fully closed" position. The handle on the housing roof rotates with the valve during automatic operation, thereby visually indicating the position of the ball valve.

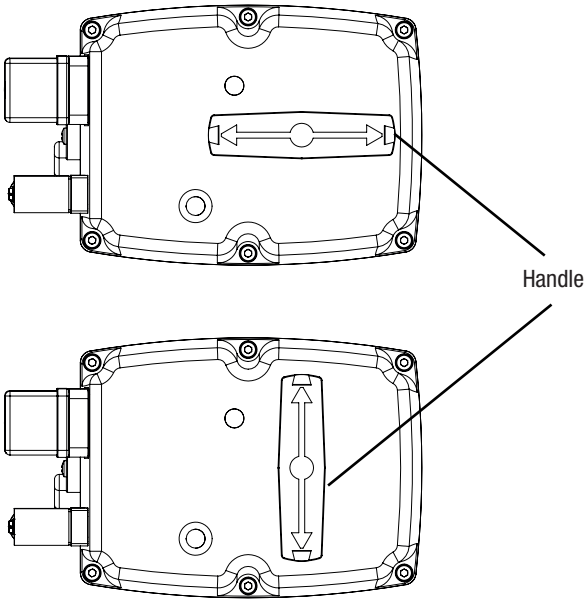

Fig. 16: Top view of the drive (top = open, bottom = closed)

© Lutz-Jesco GmbH 2020
Subject to technical changes.
200714

Manual mode

The drive is fitted with a manual emergency gear for actuating the control rod in the event of a power cut. Move the operating mode lever from the AUTO position to the MAN position. As a result, the motor is mechanically disconnected from the gear. The drive can now be adjusted with the handle.

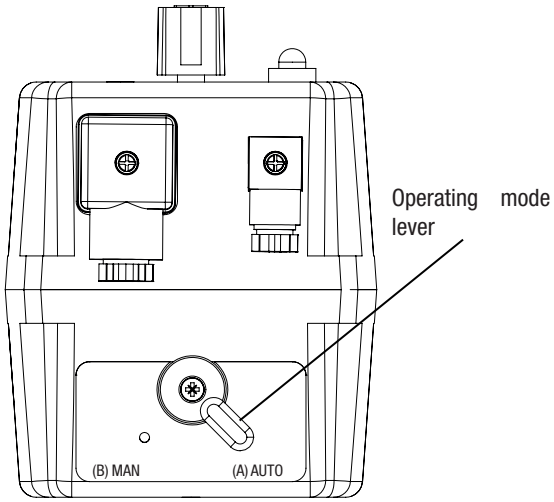

Fig. 17: Toggling between automatic and manual operation

Returning to automatic operation

> The drive contains an internal function that protects it against excessive motor operating times. If the motor has switched itself off, toggling from manual to automatic operation solely by moving the operating switch from MAN to AUTO is no longer possible.

Changing from MAN to AUTO before the motor is switched off:

➔ Move the operating mode lever from the MAN position to the AUTO position.

➔ Gently turn the handle in order to resynchronise the gear with the motor.

Changing from MAN to AUTO after the motor has been switched off:

➔ In the MAN switch position, turn the handle until an end position has been reached (open or closed).

▸ The motor is reactivated.

➔ As soon as the motor is running, move the operating mode lever from MAN to AUTO.

▸ The drive is again ready for operation.

or

➔ Move the operating mode lever from MAN to AUTO.

➔ Disconnect the power supply for a brief period of time.

▸ The drive is reset. After that it is again ready for operation.

9.2.2 Drive operating light

The operating state of the drive is indicated by the LED in the cover. The flashing cycle is depicted in the following table in the “display” column. The time amounts to 200 ms per binary number. A notification cycle consists of 4 columns each with 4 binary numbers. The binary numbers have the following configuration: 1 = LED on; 0 = LED off.

Condition	Time	Display
No voltage	100 %	0000 0000 0000 0000
Operating ready	100 %	1111 1111 1111 1111
Protective circuit activated	200 ms	1010 1010 1010 1010
Manual actuation activated	200 ms	0111 1011 1100 0000
Battery activated	200 ms	1000 0000 0000 0000
Battery empty	200 ms	1010 1000 0000 0000

Tab. 15: Adjusting the drive

9.3 Adjusting the drive

DANGER!

Mortal danger from electric shock!

Live parts can inflict fatal injuries.

⇨ Work may only be carried out by qualified personnel.

⇨ Disconnect the device from the power supply.

> The drives are pre-adjusted. Depending on the intended use, any play or insufficient alignment of fittings connections or adapters may require that you adapt the drive's travel to the respective fitting or readjust the feedback depending on the switching. Extended operating time and heavy vibration may require a readjustment.

9.3.1 Checking the limit switches

Deactivating the motor

> The terminal connection is indicated on the motor housing.

Perform the following working steps:

1. Return the operating mode lever to the AUTO position.
2. Electrically move the motor to the CLOSED position.
3. Check that the connected valve has been closed.
4. Electrically move the motor to the OPEN position.

© Lutz-Jesco GmbH 2020

5. Check that the connected valve has been fully opened.

End position signals

> The terminal connection is indicated on the motor housing.

Perform the following working steps:

1. Return the operating mode lever to the AUTO position.
2. Electrically move the motor to the CLOSED position.
3. The CLOSED position feedback must be closed.
4. Return the operating mode lever to the MAN position.
5. Turn the handle counterclockwise. The contact must open after approx. 1/4 rotation (1/4 rotation at the handle = 5° rotation of the main shaft).

> The servomotor's gear has some play. This means that the ¼ rotation only begins with the first movement of the main shaft with the position indicator.

6. Return the operating mode lever to the AUTO position.
   ▶ The motor returns to the CLOSED position.
7. Electrically move the motor to the OPEN position.
8. The OPEN position feedback must interconnect.
9. Return the operating mode lever to the MAN position.
10. Turn the handle clockwise. The contact must open after approx. 1/4 rotation. Observe the notice regarding the gear play.

9.3.2 Adjusting the drive

Required actions:

✓ The housing has been opened. (In order to do this, the handle and fastening pin must be removed first.)

✓ The handle has been replaced on the main shaft.

Resources required:

🛠 Setting tool W00037

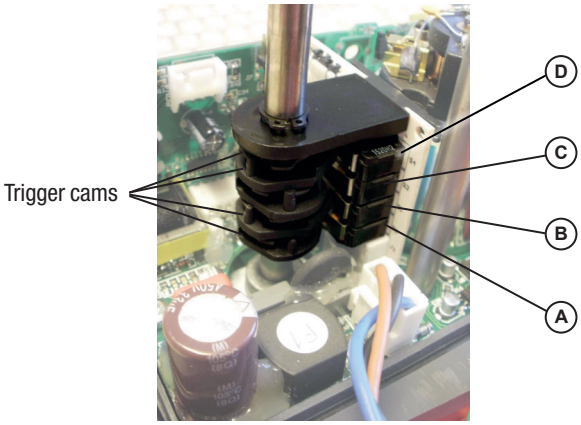

Fig. 18: Adjusting the drive

Microswitch		
A	Motor deactivation CLOSED	
B	Motor deactivation OPEN	
C	End position signal CLOSED	Small connector Terminal 1+2
D	End position signal OPEN	Small connector Terminal 1+3
A+B limit the travel C+D effect the position feedback		

Tab. 16: Adjusting the drive

Deactivating the motor

Perform the following working steps:

1. Return the operating mode lever to the MAN position.
2. Move to the position that is to be changed using the handle.
3. Turn the trigger cam A or B on the main shaft using the setting tool until you can hear that the microswitch has been activated. Move the trigger cam to the microswitch in the direction of rotation, in which the main shaft will move.
4. Re-establish the electrical connection. Change the drive mode from MAN to AUTO and check the setting by electrically moving to the position.

End position signals

Required actions:

✓ The motor deactivation has been checked or adjusted.

✓ The motor has been electrically moved up to the motor deactivation position.

Perform the following working steps:

5. Turn the trigger cam C or D on the main shaft using the setting tool until you can hear that the microswitch has been activated. Move the trigger cam to the microswitch in the direction of rotation, in which the main shaft will move. Then turn it by another approx. 5°.
6. Check the continuity at the connector.
7. Return the operating mode lever to the MAN position.
8. Turn the motor at the hand wheel in the direction of the other position. After approx. 1/4 rotation, the switch opens the contact. (1/4 rotation at the handle = 5° rotation of the main shaft.)

> The servomotor's gear has some play. The 1/4 rotation only begins with the first movement of the main shaft.

9. Re-establish the electrical connection. Change the drive mode from MAN to AUTO and check the setting by electrically moving to the position.
10. After the adjustment has been completed, carefully replace the cover. Make sure that the cables pass the shafts and motor with sufficient distance as it was originally the case so that malfunction due to cables getting caught is avoided. The cover must tightly fit to its base.

© Lutz-Jesco GmbH 2020
Subject to technical changes.
200714

11. Insert the screws and tighten them crosswise.

12. Replace the handle and possibly the hand wheel and fix them.

✓ **Drive adjusted.**

9.4 Shutting down in an emergency

DANGER!

Increased danger to life from chlorine escape

Chlorine is poisonous. In severe cases, breathing in chlorine may lead to death. It irritates the eyes, the respiratory system and the skin.

- ⇨ If chlorine escapes, leave the room immediately.
- ⇨ Use sufficient personal protective equipment.
- ⇨ If chlorine gas escapes, wear a Type 2 self-contained breathing apparatus that complies with EN 137.
- ⇨ Only initiate counter measures after putting on the protective equipment.
- ⇨ Given a serious escape and insufficient equipment or qualifications, leave the work to professional emergency services personnel. Do not take any unnecessary risks.

- The chlorine tank valves must be closed.
- The further procedure depends on the type of accident and should be planned and executed by professional personnel.

For liquid chlorine systems, the incorrect operation of the ball valves can cause further damage. Pipes and equipment that are (is) filled with liquid chlorine, can burst in the event of a temperature increase if no expansion systems are installed.

9.5 Check intervals

You must check the components of the chlorine system for leaks on a daily basis and after maintenance or commissioning work.

The following checks are to be carried out at the ball valve:

- Check the control rod seal for leak-tightness.
- Check the housing seal and ball seal for leak-tightness.

© Lutz-Jesco GmbH 2020

10 Shutdown

10.1 Short-term shutdown

Perform the following working steps:

1. Close the chlorine tank valves.
2. Use the injector to suck off the remaining chlorine.
3. Switch off the injector.

✓ **Chlorinator shut down for the short term.**

10.2 Long-term shutdown

Perform the following working steps:

1. Close the chlorine tank valves.
2. Use the injector to suck off the remaining chlorine.
3. Operate the chlorination installation for approx. 5 minutes with nitrogen or dry compressed air at approximately 5 bar.
4. Close all the connections to protect the lines and devices from humidity and dirt.
5. Switch off the injector.

✓ **Chlorinator shut down for the long term.**

We recommend maintenance after a longer standstill period (see chapter 11 “Maintenance” on page 25).

10.3 Storage

Storing the device correctly will extend its service life. You should avoid negative influences such as extreme temperatures, high humidity, dust, chemicals, etc.

Ensure ideal storage conditions where possible:

- store the ball valves in the open position,
- The storage place must be cold, dry, dust-free and moderately ventilated
- temperatures between -20 °C and +50 °C.

11 Maintenance

The ball valve and drive are maintenance-free under normal operating and ambient conditions. However, some parts are subject to operational wear. This means that regular visual inspections are necessary to ensure a long operating life. Regular maintenance will protect the device from operation interruptions.

DANGER!

Danger to life from chlorine poisoning!

Do not carry out maintenance or any other work on the chlorinator until the system has been decommissioned and all of the chlorine gas has been removed from the lines. The failure to follow this instruction presents a significant risk of injury.

⇨ Prior to any maintenance work, prepare the system in accordance with section 11.3 “Preparing the system for maintenance” on page 26.

WARNING

Increased risk of accidents due to insufficient qualification of personnel!

Chlorinators and their accessories must only be installed, operated and maintained by personnel with sufficient qualifications. Insufficient qualification will increase the risk of accidents.

⇨ Ensure that all action is taken only by personnel with sufficient and corresponding qualifications.

PLEASE NOTE

Damage to the system due to corrosion

Water in chlorine carrying system components combines with chlorine to form hydrochloric acid and leads to corrosion

⇨ After completing maintenance work, remove all the water residue from the system before returning it to operation.

⇨ Keep the connection of the contact vacuum meter closed so that humidity cannot penetrate

© Lutz-Jesco GmbH 2020
Subject to technical changes.
200714

11.1 Maintenance intervals

To avoid hazardous incidents, chlorinators must be regularly maintained. This table gives you an overview of maintenance work and the intervals at which you must carry it out. The next few sections contain instructions for carrying out this work.

Interval	Maintenance
1 year	■ Check the ball seal and housing seal and replace them if required. ■ Check the ball, ball cavities and connection ends for contamination and clean them if required. With ball valves with a drive. ■ Function test of the drive

Tab. 17: Maintenance intervals

> In some cases, regional regulations may require shorter maintenance intervals. Maintenance intervals depend only on how frequently the equipment is used. Chemical wear of seals, for example, begins with the initial contact with the medium and continues irrespective of the usage type.

11.2 Maintenance accessories

For maintenance a seal set is required.

11.3 Preparing the system for maintenance

Perform the following working steps:

1. Close the chlorine tank valves.
2. Use the injector to suck off the remaining chlorine.
3. Run the chlorinator for approximately five minutes with nitrogen or dry compressed air.
4. Switch off the injector.
5. Close all connections in order to protect the lines and equipment against humidity.

✓ **The system is prepared for maintenance.**

11.4 Maintaining the ball valve

> The maintenance can also be carried out without having to remove the fitting.

Precondition for action:

✓ The system has been prepared for maintenance in accordance with section 11.3 “Preparing the system for maintenance” on page 26.

✓ All feed and discharge lines have been depressurised.

11.4.1 Disassembling the drive

The following section is based on the assumption that the ball valve is a ball valve with a handle. However, if the ball valve is fitted with a drive, the drive must be removed for the maintenance work.

Perform the following working steps:

1. Disconnect the drive from the power supply.
2. Remove the four fastening screws (4), which connect the drive (1) including the bridge (2) with the ball valve (5).
3. Lift the drive off and put it to one side.
4. Remove the adapter (3) from the control rod and put it to one side.

✓ **The drive has been disassembled.**

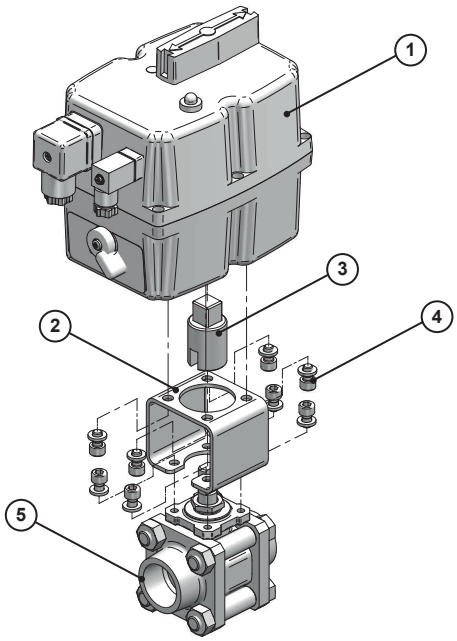

Fig. 19: Disassembling the drive

> The centre part of the ball valve can be removed irrespective of the design (internal thread, flange) of the ball valve.

11.4.2 Replacing the ball seal and housing seal

Perform the following working steps:

1. Close the ball valve by turning the hand grip (1) diagonally to the direction of flow.
2. Loosen the bottom two hexagonal nuts (4) by approx. 2 to 3 turns.
3. Remove the top two hexagonal nuts, hexagonal screws (3) and spacer sleeves (2).
4. Remove the centre part of the ball valve (5).

© Lutz-Jesco GmbH 2020

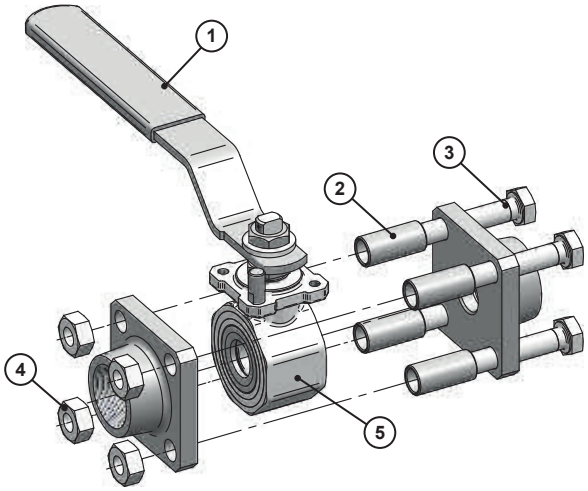

Fig. 20: Removing the centre part of the ball valve

5. Remove the ball seal and housing seals (6 and 8).

WARNING

Risk of injury!

In order to remove the ball, the control rod may need to be rotated.

⇨ Never put your hands into the interior of the centre ball part in order to remove the ball as this may result in serious injury!

6. Remove the ball (7) from the centre part. Carefully check the ball and its cavities for contamination. Remove any contamination with the help of an alcohol-based solvent and a suitable cloth.

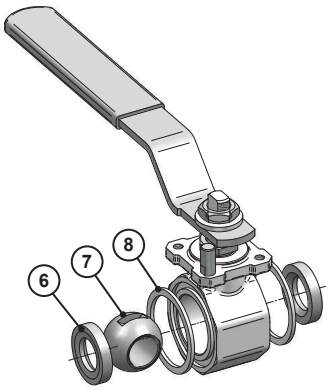

Fig. 21: Replacing the ball seal and housing seal

7. Push the ball back into the centre part of the ball valve. The lower dihedron of the control rod must rest in the ball's recess. You may need to rotate the control rod in order to do this.
8. Close the ball valve by turning the hand grip in parallel to the direction of flow.
9. Insert the new ball seal and housing seal.
10. Clean the connection ends, which were left in the pipe, before assembling the centre part of the ball valve.
11. Push the centre part of the ball valve between the connection ends. During the assembly, make sure that the centre part rests on the spacer sleeves.
12. Close the ball valve so that the ball seals centre correctly. Tighten the hexagonal nuts in a criss-cross sequence. Comply with the tightening torques listed in Tab. 18 „Tightening torques for housing screws“. The nuts should be tightened in 3 stages:

    a. In a criss-cross sequence with 30 % of the tightening torque.
    b. As above with 60 % of the tightening torque.
    c. As above with 100 % of the tightening torque.
    d. Tighten all nuts again in a circular sequence with the full tightening torque. This process must be repeated until the nuts will not turn any further when the full tightening torque is applied.

DN	Thread Ø Union nut	Tightening torque
DN8	M8	20 Nm
DN15	M8	20 Nm
DN20	M8	20 Nm
DN25	M10	40 Nm

Tab. 18: Tightening torques for housing screws

✓ **The ball seal and housing seal have been successfully replaced.**

11.4.3 Replacing the control rod seal

PLEASE NOTE

Damage of the control rod

The replacement of the control rod seal can lead to damage of the control rod. Therefore, we recommend that the control rod seal is only replaced in exceptional cases.

⇨ Only remove the control rod seal if this is absolutely necessary. (For example if the control rod is leaking and if the leak cannot be corrected by readjusting the control rod. See also Section 8.2.1.)

Perform the following working steps:

1. Carry out steps 1 to 6 in Section 11.4.2.
2. Depending on the version, loosen the handle nut (1) and remove the washer (2) and handle (3).
3. Loosen the gland nut (4)
4. Tighten the control rod (7) on the upper flat edge in a bench vice. Raise the centre part to its fullest extent and screw the control rod out of the housing.
5. Remove the control rod seal (8), the gland (6) and the metal ring (5) from the control rod.
6. Clean the interior of the centre housing, the spindle and the gland nut using an alcohol-based solvent and a suitable cloth. Check all parts for damage.
7. Take a new control rod seal, a gland and a metal ring from the sealing set and place these parts on the control rod.
8. Screw the control rod back into the centre housing.

© Lutz-Jesco GmbH 2020
Subject to technical changes.
200714

9. Insert the gland nut on the control rod and screw the nut into the centre part. Comply with the specifications listed in Tab. 19 “Tightening torques for gland nuts” on page 28.

DN	Tightening torque
DN8	10 Nm
DN15	10 Nm
DN20	20 Nm
DN25	25 Nm

Tab. 19: Tightening torques for gland nuts

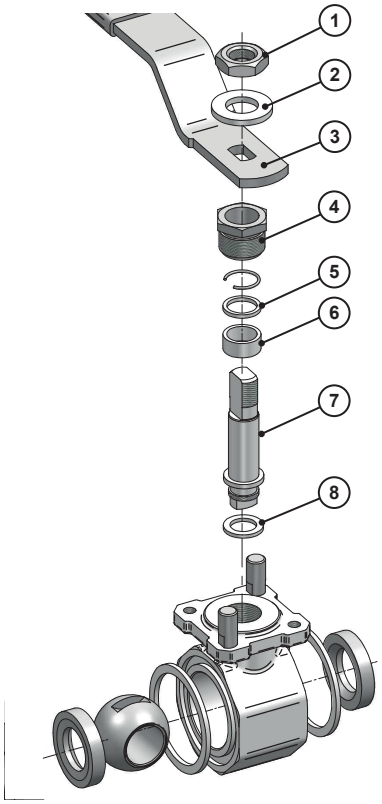

Fig. 22: Replacing the control rod seal

10. Carry out steps 8 to 12 in Section 11.4.2.

✓ **The control rod seal has been successfully replaced.**

11.5 Function test of the drive

The drive is maintenance-free. Its function must be checked within the scope of the annual maintenance.

Precondition for action:

The drive has been disassembled in accordance with section 11.4.1 “Disassembling the drive” on page 26.

Perform the following working steps:

1. Move the operating mode lever from the AUTO position to the MAN position.

2. Turn the hand grip of the drive by min. 45°.

3. Return the operating mode lever to the AUTO position.

4. Activate the drive voltage supply for a short time and disconnect it immediately.

▶ The drive must now move to the closed end position independently.

✓ **The function test of the drive has been performed successfully.**

11.6 Finishing maintenance

The centre part of the ball valve can be removed irrespective of the design (internal thread, flange) of the ball valve.

11.6.1 Ball valve with handle

Complete the maintenance work with the following working steps:

1. Push the handle onto the control rod. Make sure that the limit stops work correctly and that the handle and the ball bore are pointing in the same direction.

2. Place the washer on the handle.

3. Screw the hexagonal nut onto the control rod in order to fasten the handle.

4. Check the correct function of the ball valve by operating the handle several times.

✓ **The ball valve with handle has been successfully maintained.**

11.6.2 Ball valve with drive

Complete the maintenance work with the following working steps:

1. Place the adapter on the control rod.

2. Screw the bridge with the attached drive to the ball valve. Make sure that the adapter square fits perfectly into the bore of the drive.

3. Check that the drive and control rod run in synchronism. The drive's handle and the slot in the adapter must point in the same direction.

4. Move the operating mode lever of the drive to the MAN position if this has not already been done. During this process, gently move the handle in order to synchronise the gear.

5. Manually move through the entire actuating travel of the drive in order to test the correct interaction between the drive and ball valve. Then rotate the drive back into its home position.

6. Move the operating mode lever back to the AUTO position while gently moving the handle.

7. Reconnect the drive to the power supply. Check that the cable screw connection is leak-tight.

✓ **The ball valve with drive has been successfully maintained.**

© Lutz-Jesco GmbH 2020

12 Troubleshooting

See below for information about how to rectify faults on the device or the system. If you cannot eliminate the fault, please consult with the manufacturer on further measures or return the device for repair.

12.1 Ball valve malfunctions

Problem	Possible cause	Remedy
Leakage into the ambient air.	The control rod seal has settled.	Retighten the gland nut (see section 8.2.1).
	The housing seal is worn.	Replace the housing seal (see section 11.4.2).
	The ball valve has been incorrectly fitted in the pipe.	Check the installation of the ball valve (see section 7).
	The housing screws have been tightened unevenly.	Slightly loosen the screws and evenly tighten them with the correct torque (see Section 11.4.2).
	The control rod seal and possibly the gland are worn.	Replace the control rod seal and the gland (see Section 11.4.3).
	The pipes have not been installed free from tension.	Install the pipes free from tension.
Leakage into the pipe.	The ball valve is worn.	Replace the ball valve (see Section 11.4.2).
The ball valve is tight.	The ball is contaminated.	Clean the ball/ball valve (see Section 11.4.2).
	The housing screws have been overtightened.	Slightly loosen the screws and evenly tighten them with the correct torque (see Section 11.4.2).

Tab. 20: Troubleshooting for the ball valve

12.2 Malfunctions of the drive

Problem	Possible cause	Remedy
The drive does not move. The operating LED is not lit.	There is no power supply.	Check that voltage is applied to the connector and that the switching is correct.
The drive does not move. The operating LED is lit.	The operating mode selector is in the MAN position.	Move the operating mode selector from MAN to AUTO (see Section 9.2).
The drive starts and then stops. The operating LED is flashing.	The ball valve is tight or blocked or unsuitable for the drive.	Correct the cause of the overload or select a more powerful drive.
The drive starts and then stops. The operating LED is no longer lit.	An external fuse has blown.	Check the external fuse and replace it if required. Check the cable routing.
The drive is in the open position. The fitting is closed.	The drive has been installed the wrong way round.	Correct the layout.
	The end position switch has been connected the wrong way round.	Correct the cabling.
The fitting doesn't open or close correctly.	The end position adjustment does not correspond with the ball valve.	Correct the operation of the limit switch with the W00037 tool (see Section 9.3).
The limit switch for position reporting does not react.	The switching is incorrect.	Check and correct the switching.
	The adjustment of the trigger cams is incorrect.	Readjust the trigger cams (see section 9.3).
The drive moves but the fitting is not operated.	The position of the adapter in the drive bore or on the control rod is incorrect.	Check the adapter position. Replace the adapter if required.
	The ball valve is damaged.	Replace the ball valve.

Tab. 21: Troubleshooting for the drive

© Lutz-Jesco GmbH 2020
Subject to technical changes.
200714

13 Spare parts

13.1 Ball valve with handle

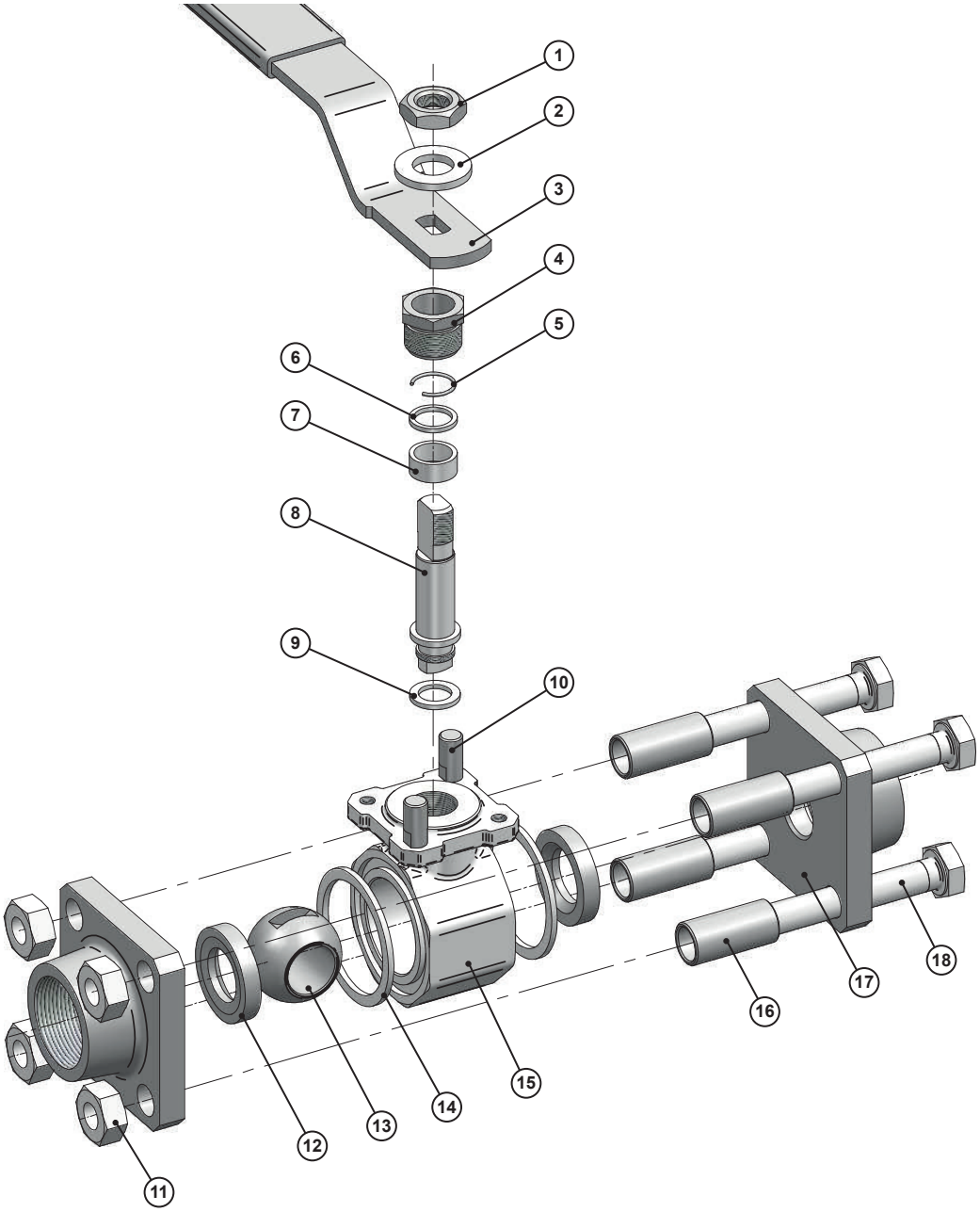

Fig. 23: Ball valve with handle

© Lutz-Jesco GmbH 2020

Position	Quantity	Description
1	1	Handle nut
2	1	Washer
3	1	Handle
4	1	Gland nut
5	1	Elastic ring
6*	1	Metal ring
7*	1	Gland
8	1	Control rod
9*	1	Control rod seal
10	2	Stop pin
11	4	Hexagon nut
12*	2	Ball seal
13	1	Ball
14*	2	Housing seal
15	1	Centre part of the ball valve
16	4	Spacer sleeves
17	2	Flange
18	4	Hexagonal screws

Tab. 22: Spare parts for the ball valve

* Contained in the sealing kit for ball valves.

© Lutz-Jesco GmbH 2020
Subject to technical changes.
200714

13.2 Drive with mounting hardware

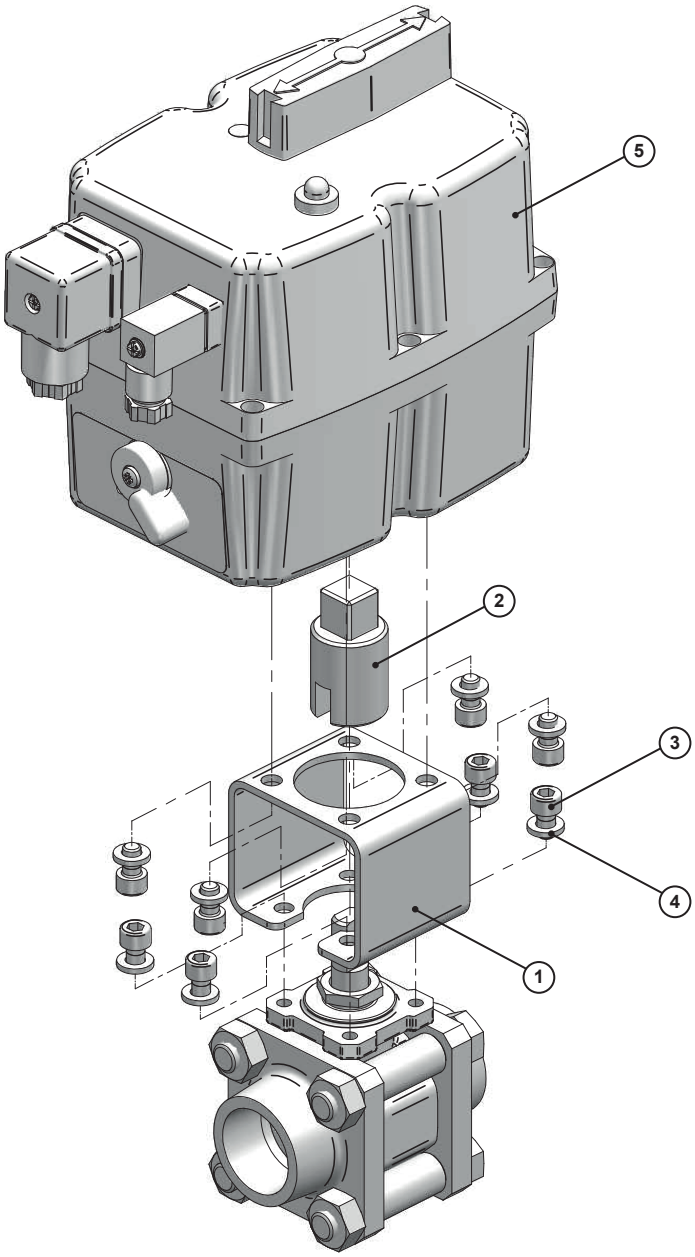

Fig. 24: Drive with mounting hardware

Position	Quantity	Description
1	1	Bridge
2	1	Adapter
3	8	Cylinder head screw
4	8	Washer
5	1	Drive unit

Tab. 23: Spare parts for the ball valve

© Lutz-Jesco GmbH 2020

14 Declaration of no objection

Please copy the declaration, stick it to the outside of the packaging and return it with the device.

Declaration of no objection

Please fill out a separate form for each appliance!

We forward the following device for repairs:

Device and device type: ..... Part-no.: .....

Order No.: ..... Date of delivery: .....

Reason for repair: .....

.....

.....

Dosing medium

Description: ..... Irritating: ☐ Yes ☐ No

Properties: ..... Corrosive: ☐ Yes ☐ No

We hereby certify, that the product has been cleaned thoroughly inside and outside before returning, that it is free from hazardous material (i.e. chemical, biological, toxic, flammable, and radioactive material) and that the lubricant has been drained.

If the manufacturer finds it necessary to carry out further cleaning work, we accept the charge will be made to us.

We assure that the aforementioned information is correct and complete and that the unit is dispatched according to the legal requirements.

Company / address: ..... Phone: .....

..... Fax: .....

..... Email: .....

Customer No.: ..... Contact person: .....

Date, Signature: .....

© Lutz-Jesco GmbH 2020
Subject to technical changes.
200714

15 Warranty claim

Warranty claim

Please copy and send it back with the unit!

If the device breaks down within the period of warranty, please return it in a cleaned condition with the complete warranty claim.

Sender

Company: ..... Phone: ..... Date: .....

Address: .....

Contact person: .....

Manufacturer order no.: ..... Date of delivery: .....

Device type: ..... Serial number: .....

Nominal capacity / nominal pressure: .....

Description of fault: .....

.....

.....

.....

.....

.....

.....

.....

Service conditions of the device

Point of use / system designation: .....

.....

.....

Accessories used (suction line etc.): .....

.....

.....

.....

.....

Commissioning (date): .....

Duty period (approx. operating hours): .....

Please describe the specific installation and enclose a simple drawing or picture of the chemical feed system, showing materials of construction, diameters, lengths and heights of suction and discharge lines.

© Lutz-Jesco GmbH 2020

16 Notes to conformity

(for devices without motor up to DN25)

The devices fall under the purview of the pressure equipment directive 2014/68/EU. The values stated below do not exceed the limit values in according to article 4, paragraph 1. Therefore, it is designed and manufactured in accordance with valid good engineering practice This pressure devices may not carry a CE marking and an EU declaration of conformity will not be issued.

Description:	Chlorine ball-valve
nominal widths:	DN8, DN15, DN20, DN25
Nominal pressure:	PN40
Medium:	Chlorine, fluid group 1

The devices fulfil all the demands made by the directive(s): 2014/68/EU Pressure equipment directive

© Lutz-Jesco GmbH 2020
Subject to technical changes.
200714

17 EU Declaration of Conformity

(for devices with motor)

(DE) EU-Konformitätserklärung
Hiermit erklären wir, dass das nachfolgend bezeichnete Gerät aufgrund seiner Konzipierung und Bauart sowie in der von uns in Verkehr gebrachten Ausführung den einschlägigen grundlegenden Sicherheits- und Gesundheitsanforderungen der aufgeführten EG-Richtlinien entspricht. Bei einer nicht mit uns abgestimmten Änderung am Gerät verliert diese Erklärung ihre Gültigkeit.

(EN) EC Declaration of Conformity
We hereby certify that the device described in the following complies with the relevant fundamental safety and sanitary requirements and the listed EC regulations due to the concept and design of the version sold by us.
If the device is modified without our consent, this declaration loses its validity.

(FR) Déclaration de conformité CE
Nous déclarons sous notre propre responsabilité que le produit ci-dessous mentionné répond aux exigences essentielles de sécurité et de santé des directives CE énumérées aussi bien sur le plan de sa conception et de son type de construction que du modèle que nous avons mis en circulation.
Cette déclaration perdra sa validité en cas d'une modification effectuée sur le produit sans notre accord explicite.

(ES) Declaración de conformidad CE
Por la presente declaramos que, dados la concepción y los aspectos constructivos del modelo puesto por nosotros en circulación, el aparato mencionado a continuación cumple con los requisitos sanitarios y de seguridad vigentes de las directivas de la U.E. citadas a continuación.
Esta declaración será invalidad por cambios en el aparato realizados sin nuestro consentimiento.

(NL) EU-overeenstemmingsverklaring
Ondergetekende Lutz-Jesco GmbH, bevestigt, dat het volgende genoemde apparaat in de door ons in de handel gebrachte uitvoering voldoet aan de eis van, en in overeenstemming is met de EU-richtlijnen, de EU-veiligheidsstandaard en de voor het product specifieke standaard. Bij een niet met ons afgestemde verandering aan het apparaat verliest deze verklaring haar geldigheid.

(PT) Declaração de conformidade CE
Declaramos pelo presente documento que o equipamento a seguir descrito, devido à sua concepção e ao tipo de construção daí resultante, bem como a versão por nós lançada no mercado, cumpre as exigências básicas aplicáveis de segurança e de saúde das directivas CE indicadas.
A presente declaração perde a sua validade em caso de alteração ao equipamento não autorizada por nós.

Bezeichnung des Gerätes:	Chlor-Kugelhahn
Description of the unit:	Chlorine gas ball valve
Désignation du matériel:	Robinet sphérique pour chlore
Descripción de la mercancía:	Llave esférica de cloro
Omschrijving van het apparaat:	Chloorkogelkraan
Designação do aparelho:	Válvula esférica de cloro
Typ: **Type:**	Chlor-Kugelhahn mit Motor Chlorine gas ball valve with motor
EU-Richtlinien: **EC directives:**	2006/42/EG, 2014/30/EU, 2011/65/EU Die Schutzziele der Niederspannungsrichtlinie 2014/35/EU wurden gemäß Anhang I, Nr. 1.5.1 der Maschinenrichtlinie 2006/42/EG eingehalten. The protective aims of the Low Voltage Directive 2014/35/EU were adhered to in accordance with Annex I, No. 1.5.1 of the Machinery Directive 2006/42/EC.
Harmonisierte Normen: **Harmonized standards:**	EN ISO 12100:2013-08 EN 61000-6-2:2011-06 EN 61000-6-4:2011-09
Dokumentationsbevollmächtigter: **Authorized person for documentation:**	Lutz-Jesco GmbH

Heinz Lutz
Geschäftsführer / Chief Executive Officer
Lutz-Jesco GmbH
Wedemark, 01.08.2016

Lutz-Jesco GmbH
Am Bostelberge 19
30900 Wedemark
Germany

© Lutz-Jesco GmbH 2020

18 Index

B
Battery system 9

C
Cleaning 26
Commissioning 19

D
Declaration of no objection 33
Dimensioned drawings 12
Dimensions 12
Dosing media
  Prohibited dosing media 7

E
EC Declaration of Conformity 33
Emergency
  General warnings 5
  Shutting down in an emergency 24
Evaporation coil
  Cleaning 26

G
General warnings 5

H
Handling instructions
  Marking 4
Hazards due to non-compliance with the safety instructions 6

I
Information about chlorine 5
Inspecting the pressure system 19
Installation
  Ball Valve 14
  Installation location 14
  With flange connection 14
  With threaded connection 15
Installation example 18
Intended purpose 7
Intended use 7

L
Leak test
  Check intervals 24
  Chlorine gas 20
  Nitrogen 19
Long-term shut-down 25

M
Maintenance 25
Maintenance accessories 26

N
Notes for the Reader 4

O
Operation 21
Operation with drive
  Automatic operation 21
  Manual mode 22

P
Personal protective equipment 6
Personnel qualification 6
Personnel tasks 7
Preparing the system for maintenance 26
Product description 8
Product warranty 7
Prohibited dosing media 7

R
Rating plate 9

S
Safety 5
Scope of delivery 8
Short-term shut-down 25
Shut-down 25
Shutting down in an emergency 21
Signal words
  Explanation 4
Specialist staff 6
Storage 25
Structure of the device 8

T
Technical data 10
Trained electricians 6
Trained persons 6
Troubleshooting 29

W
Warnings
  General warnings 5
  Marking 4
  Signal words 4
Warning sign
  Explanation 4
Warranty claim 34
Working in a safety-conscious manner 6

© Lutz-Jesco GmbH 2020
Subject to technical changes.
200714

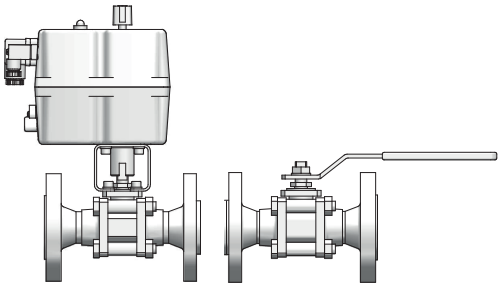

Lutz-Jesco GmbH

Am Bostelberge 19
D-30900 Wedemark

Phone: +49 5130 5802-0
info@lutz-jesco.com
www.lutz-jesco.com

Operating instructions
Chlorine ball-valve

Copyright 2020 by Lutz-Jesco GmbH