Chlorinator
C 2526
Operating instructions

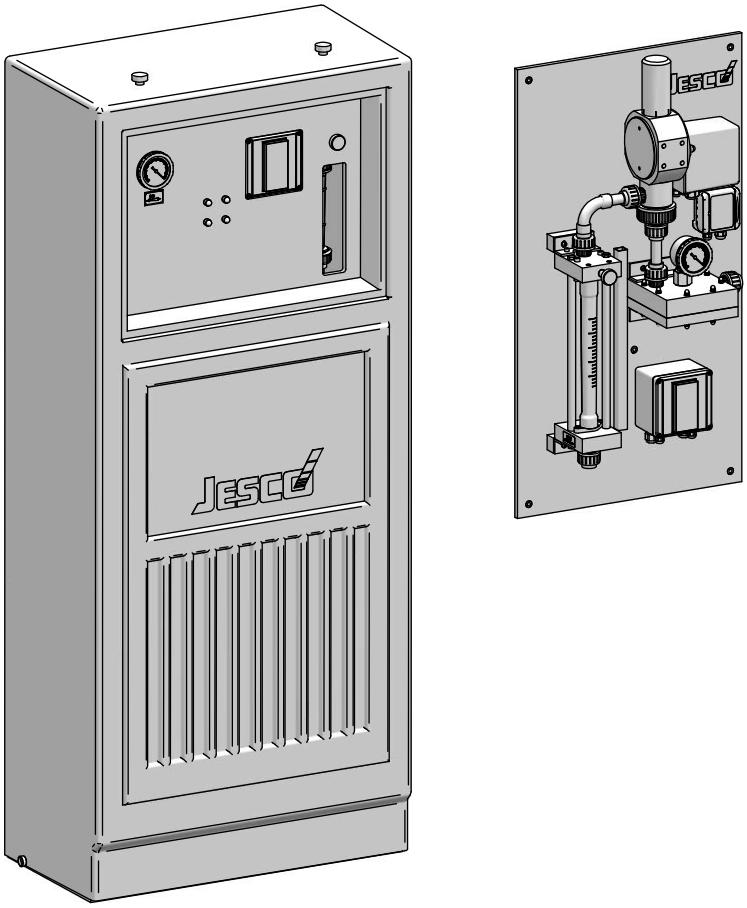

Read the operating manual!

The user is responsible for installation and operation related mistakes!

Original operating instructions

© Lutz-Jesco GmbH 2016

BA-20901-02-V01

Dosing | Liquids
Conveying | Gases
Control | Systems

Table of Contents

1 Notes for the Reader 4
1.1 General non-discrimination 4
1.2 Explanation of the signal words 4
1.3 Explanation of the warning signs 4
1.4 Identification of warnings 4
1.5 Instruction for action identification 5

2 Safety 6
2.1 General warnings 6
2.2 Information about chlorine 6
2.3 Hazards due to non-compliance with the safety instructions 7
2.4 Working in a safety-conscious manner 7
2.5 Personal protective equipment 7
2.6 Personnel qualification 7

3 Intended use 9
3.1 Notes on product warranty 9
3.2 Intended purpose 9
3.3 Prohibited dosing media 9

4 Product description 10
4.1 Scope of delivery 10
4.2 Design and function 10
4.3 Rating plate 12

5 Technical data 13

6 Dimensions 14

7 Installation 15
7.1 Installation location 15
7.2 Installing the device 16
7.3 Hydraulic installation 17
7.4 Electric installation 19
7.5 Completing the installation 20
7.6 Installation example 20

8 Control 21
8.1 Controls 21
8.2 Manual operation 21
8.3 Automatic operation 21

9 Start-up 22
9.1 Checking the vacuum system 22
9.2 Turning on the device 22
9.3 Adapting the power output 22

10 Operation 23
10.1 Setting the dosing quantity 23
10.2 Shutting down in an emergency 23
10.3 Test intervals 23

11 Shutdown 24
11.1 Short-term shutdown 24
11.2 Long-term shutdown 24
11.3 Disposal of old equipment 24

12 Maintenance 25
12.1 Maintenance intervals 25
12.2 Maintenance accessories 25
12.3 Preparing the system for maintenance 25
12.4 Minor maintenance: 25
12.5 Maintenance on the flow meter 26
12.6 Maintenance on the electrical regulation valve 27
12.7 Maintenance of the back-pressure regulator 27
12.8 Cleaning the vacuum meter 28
12.9 Functional control 29
12.10 Finishing maintenance 29

13 Troubleshooting 30

14 Spare parts 32
14.1 Housing SL 32
14.2 Flow meter 33
14.3 Module overview SL 34
14.4 Overview of modules WL 36
14.5 Back-pressure regulator 38
14.6 Vacuum meter SL / WL 40
14.7 Maintenance sets 41

15 EC Declaration of Conformity 42

16 Declaration of no objection 43

17 Warranty Application 44

18 Index 45

© Lutz-Jesco GmbH 2016
Subject to technical changes.
160520

1 Notes for the Reader

This operating manual contains information and behaviour rules for the safe and designated operation of the device.

Observe the following principles:

- read the entire operating instructions prior to inaugurating the device.
- ensure that everyone who works with or on the device has read the operating manual and follows it.
- Maintain the operating manual throughout the service life of the device.
- Pass the operating manual on to any subsequent owner of the device.

1.1 General non-discrimination

In this operating manual, only the male gender is used where grammar allows gender allocation. The purpose of this is to make the text easy to read. Men and women are always referred to equally. We would like to ask female readers for understanding of this text simplification.

1.2 Explanation of the signal words

Different signal words in combination with warning signs are used in this operating manual. Signal words illustrate the gravity of possible injuries if the risk is ignored:

Signal word	Meaning
DANGER!	Refers to imminent danger. Ignoring this sign may lead to death or the most serious injuries.
WARNING!!	Refers to a potentially hazardous situation. Failure to follow this instruction may lead to death or severe injuries.
CAUTION	Refers to a potentially hazardous situation. Failure to follow this instruction may lead to minor injury or damage to property.
Note	Refers to a danger which, if ignored, may lead to risk to the machine and its function.

Table 1: Explanation of the signal words

1.3 Explanation of the warning signs

Warning signs represent the type and source of a danger:

Warning sign	Type of danger
	Danger point
	Danger from electrical voltage
	Danger from poisonous substances
	Danger from potentially-explosive substances
	Danger from automatic startup
	Danger from corrosive substances
	Danger of damage to machine or functional influences

Table 2: Explanation of the warning signs

1.4 Identification of warnings

Warnings are intended to help you recognise risks and avoid negative consequences.

This is how warnings are identified:

Warning sign	**SIGNAL WORD**

Description of danger.

Consequences if ignored.

⇨ The arrow signals a safety precaution to be taken to eliminate the danger.

© Lutz-Jesco GmbH 2016

1.5 Instruction for action identification

This is how pre-conditions for action are identified:

✓ Pre-condition for action which must be met before taking action.

🛠 A resource such as a tool or auxiliary materials required to perform the operating instructions.

This is how instructions for action are identified:

➔ Separate step with no follow-up action.

1. First step in a series of steps.

2. Second step in a series of steps.

▸ Result of the above action.

✓ **Action completed, aim achieved.**

© Lutz-Jesco GmbH 2016
Subject to technical changes.
160520

2 Safety

2.1 General warnings

The following warnings are intended to help you eliminate the dangers that can arise while handling the device. Risk prevention measures always apply regardless of any specific action.

Safety instructions warning against risks arising from specific activities or situations can be found in the respective sub-chapters.

DANGER!

Danger to life from chlorine poisoning!

Chlorine is poisonous. In severe cases, breathing in chlorine may lead to death. It irritates the eyes, the respiratory system and the skin.

- ⇨ Install a gas warning device.
- ⇨ Use sufficient personal protective equipment.
- ⇨ When carrying out any work on the system, use a respirator mask with a Type B gas filter that complies with EN 14387.
- ⇨ Always comply with the accident prevention regulations that apply at the place of use.
- ⇨ Get rid of leaks without delay. You must get rid of even very minor leaks without delay. Together with the humidity, chlorine forms hydrochloric acid and corrosion results in rapidly increasing leakage.
- ⇨ Use only chlorine-resistant seals.
- ⇨ Only use seals once. Reusing them leads to leaks.

DANGER!

Increased danger to life from chlorine escape

A fatal quantity of chlorine gas can be released from a leakage.

- ⇨ If chlorine escapes, leave the room immediately.
- ⇨ Use sufficient personal protective equipment.
- ⇨ If chlorine gas escapes, wear a Type 2 self-contained breathing apparatus that complies with EN 137.
- ⇨ Only initiate counter measures after putting on the protective equipment.
- ⇨ Given a serious escape and insufficient equipment or qualifications, leave the work to professional emergency services personnel. Do not take any unnecessary risks.

DANGER!

Danger to life through explosions!

When using dosing devices without ATEX certification in a potentially explosive area, explosions can occur that result in fatal injuries.

- ⇨ Never use the device in potentially explosive areas.

WARNING!!

Increased risk of accidents due to insufficient qualification of personnel!

Chlorinators and their accessories must only be installed, operated and maintained by personnel with sufficient qualifications. Insufficient qualification will increase the risk of accidents.

- ⇨ Ensure that all action is taken only by personnel with sufficient and corresponding qualifications.
- ⇨ Prevent access to the system for unauthorised persons.

Note

Damage to the system due to corrosion

Chlorine gas is highly hygroscopic. This means that humidity enters the system at any open connection on devices or pipes, which results in the formation of hydrochloric acid and contamination. thus inevitably causing damage to the units.

- ⇨ Keep all connections (including in the vacuum system and on all devices not currently in use) closed at all times.
- ⇨ After maintenance work is complete, remove all water residues from the system before placing it into operation.

2.2 Information about chlorine

Chlorine is a hazardous substance. The chemical element chlorine is a greenish-yellow, toxic gas with a pungent odour, which can be detected in the air at concentrations below 1 ppm (= 1 ml/m³).

Chlorine is 2.5 times heavier than air and accumulates at ground level.

Chlorine is extremely toxic for water organisms. The reason for the toxicity of chlorine is its extraordinary reactivity. It reacts with animal and vegetable tissue and thus destroys it.

Air with a chlorine gas content of 0.5 -1% leads to a quick death in mammals and humans, as it attacks the respiratory tract and the pulmonary alveolus (formation of hydrogen chloride or hydrochloride acid).

Note

Faults due to insufficient chlorine quality

Impurities in the chlorine gas form deposits in devices and valves and can attack the components chemically. This can lead to malfunctions.

- ⇨ Only use technically pure chlorine that meets the following requirements:
  - Mass content of chlorine at least 99.5%
  - Water content max. 20 mg/kg
  Chlorine that complies with EN 937 meets these requirements

© Lutz-Jesco GmbH 2016

2.3 Hazards due to non-compliance with the safety instructions

Failure to follow the safety instructions may endanger not only persons, but also the environment and the device.

The specific consequences can be:

- failure of important functions of the device and of the corresponding system,
- failure of required maintenance and repair methods,
- danger to persons,
- danger to the environment caused by substances leaking from the system.

2.4 Working in a safety-conscious manner

Besides the safety instructions specified in this operating manual, further safety rules apply and must be followed:

- accident prevention regulations
- safety and operating provisions,
- safety regulations on handling hazardous substances,
- environmental protection provisions,
- applicable standards and legislation.

2.5 Personal protective equipment

Based on the degree of risk posed by the dosing medium and the type of work you are carrying out, you must use corresponding protective equipment. Read the Accident Prevention Regulations and the Safety Data Sheets to the dosing media find out what protective equipment you need.

You will require the minimum of the following personal protective equipment:

Personal protective equipment required	
	Respirator mask
	Protective clothing
	Safety shoes
	Protective gloves

Table 3: Personal protective equipment required

Wear the following personal protective equipment when performing the following tasks:

- commissioning,
- all work on gas-bearing sections of the plant
- Changing the chlorine tank,
- Shutdown
- maintenance work,
- Disposal

2.6 Personnel qualification

Any personnel who work on the device must have appropriate special knowledge and skills.

Anybody who works on the device must meet the conditions below:

- attendance at all the training courses offered by the owner,
- personal suitability for the respective activity,
- sufficient qualification for the respective activity,
- training in how to handle the device,
- knowledge of safety equipment and the way this equipment functions,
- knowledge of this operating manual, particularly of safety instructions and sections relevant for the activity,
- knowledge of fundamental regulations regarding health and safety and accident prevention.

All persons must generally have the following minimum qualification:

- training as specialists to carry out work on the device unsupervised,
- sufficient training that they can work on the device under the supervision and guidance of a trained specialist.

These operating instructions differentiate between these user groups:

2.6.1 Specialist staff

Thanks to their professional training, knowledge, experience and knowledge of the relevant specifications, specialist staff are able to perform the job allocated to them and recognise and/or eliminate any possible dangers by themselves.

2.6.2 Trained electricians

Due to their professional training, knowledge and experience as well as knowledge of specific standards and provisions, trained electricians are able to do the electrical work assigned to them and to recognise and avoid any potential dangers by themselves.

They are specially trained for their specific working environment and are familiar with relevant standards and provisions.

They must comply with the legally binding regulations on accident prevention.

2.6.3 Trained persons

Trained persons have received training from the operator about the tasks they are to perform and about the dangers stemming from improper behaviour.

Trained persons have attended all trainings offered by the operator.

© Lutz-Jesco GmbH 2016
Subject to technical changes.
160520

2.6.4 Personnel tasks

In the table below you can check what qualifications are the pre-condition for the respective tasks. Only people with appropriate qualifications are allowed to perform these tasks!

Qualification	Activities
Specialist staff	■ Transportation ■ Assembly ■ Hydraulic installation ■ Commissioning ■ Taking out of operation ■ Fault rectification ■ Maintenance ■ Repairs ■ Disposal
Trained electricians	■ Electric installation ■ Rectifying electrical faults ■ Repairing the electrics
Trained persons	■ Storage ■ Control

Table 4: Personnel qualification

© Lutz-Jesco GmbH 2016

3 Intended use

3.1 Notes on product warranty

Any non-designated use of the device can impair its function and the protection provided. This leads to invalidation of any warranty claims!

Please note that liability is on the side of the user in the following cases:

- the device is operated in a manner which is not consistent with these operating instructions, particularly safety instructions, handling instructions and the section "Intended Use".
- Information on usage and environment (see section 5 „Technical data“ on page 13) is not adhered to.
- if people operate the device who are not adequately qualified to carry out their respective activities.
- No original spare parts or accessories of Lutz-Jesco GmbH are used.
- Unauthorised changes are made to the device.
- The user uses different dosing media than those indicated in the order.
- Maintenance and inspection intervals are not adhered to as required or not adhered to at all.
- The device is commissioned before it or the corresponding system has been correctly and completely installed.
- Safety equipment has been bridged, removed or made inoperative in any other way.

3.2 Intended purpose

The device is exclusively intended for the dosing of a chlorine dioxide solution in a vacuum procedure. It serves the adjustment and display of the dosing quantity.

It may only be used with technically pure chlorine with a minimum mass content of 99.5%

3.3 Prohibited dosing media

The device must not be used for the following media and substances:

- Any gases except chlorine gas,
- Media with a pressure not less than the atmospheric pressure.
- Chlorine of insufficient quality

© Lutz-Jesco GmbH 2016
Subject to technical changes.
160520

4 Product description

4.1 Scope of delivery

Please compare the delivery note with the scope of delivery. The following items are part of the scope of delivery:

- Dosing device with flow meter, manual adjustment valve, backpressure regulator and vacuum meter.
- Automatic regulation valve (optional).
- Signal converter (optional).
- Installation material for wall mounting or fixing to the floor.
- Operating instructions.

4.2 Design and function

4.2.1 Structure of a vacuum dosing system

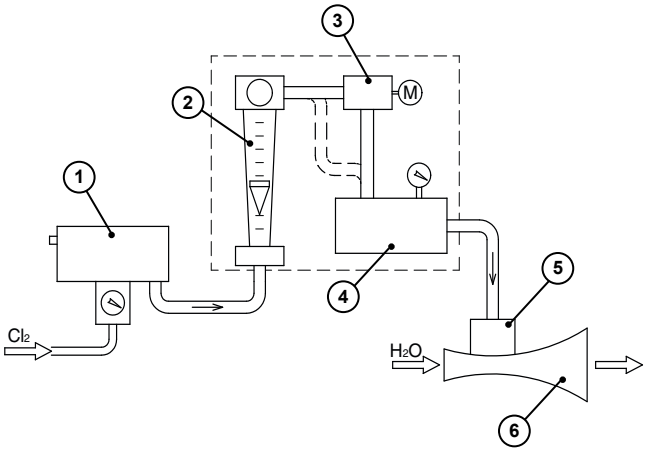

Fig. 1: Structure of a vacuum dosing system

The chlorine gas leaves the chlorine tank with positive pressure. The vacuum regulator ① only permits the chlorine to flow if a vacuum at the output of the device generates suction. A chlorine leak is not possible following a line fracture behind the vacuum regulator.

The dosing device consists of a flow meter ② with a manual regulation valve, usually an electrically-actuated regulation valve ③ and a pressure regulator ④.

The injector ⑥ generates the vacuum in accordance with the Venturi effect and mixes the chlorine gas in the motive water flow. Chlorine dosing is aborted immediately following water stand still. The non-return valve ⑤ prevents water from entering the dosing devices.

4.2.2 Structure of the device

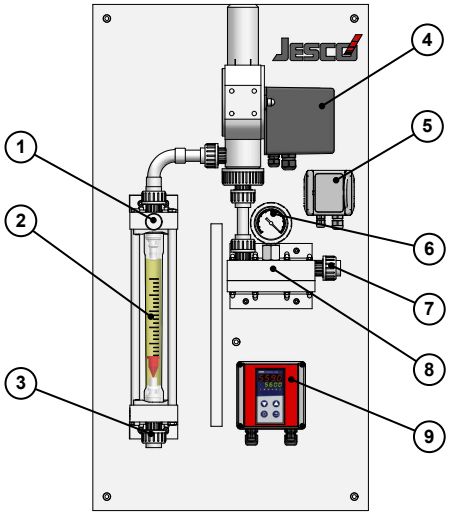

Fig. 2: Structure C 2526/WL

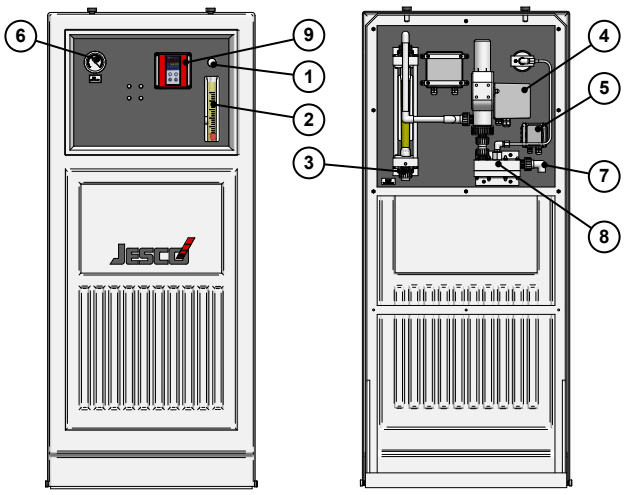

Fig. 3: Structure C 2526/SL fore and rear view

No.	Description
1	Manual dosing valve
2	Flow meter
3	Input
4	Electrical regulation valve (optional=
5	Connection box for the contact pressure gauge (optional)
6	Vacuum meter
7	Output
8	Back-pressure regulator
9	Signal converter (optional)

Table 5: Elements in the device

© Lutz-Jesco GmbH 2016

4.2.3 Functions of the device

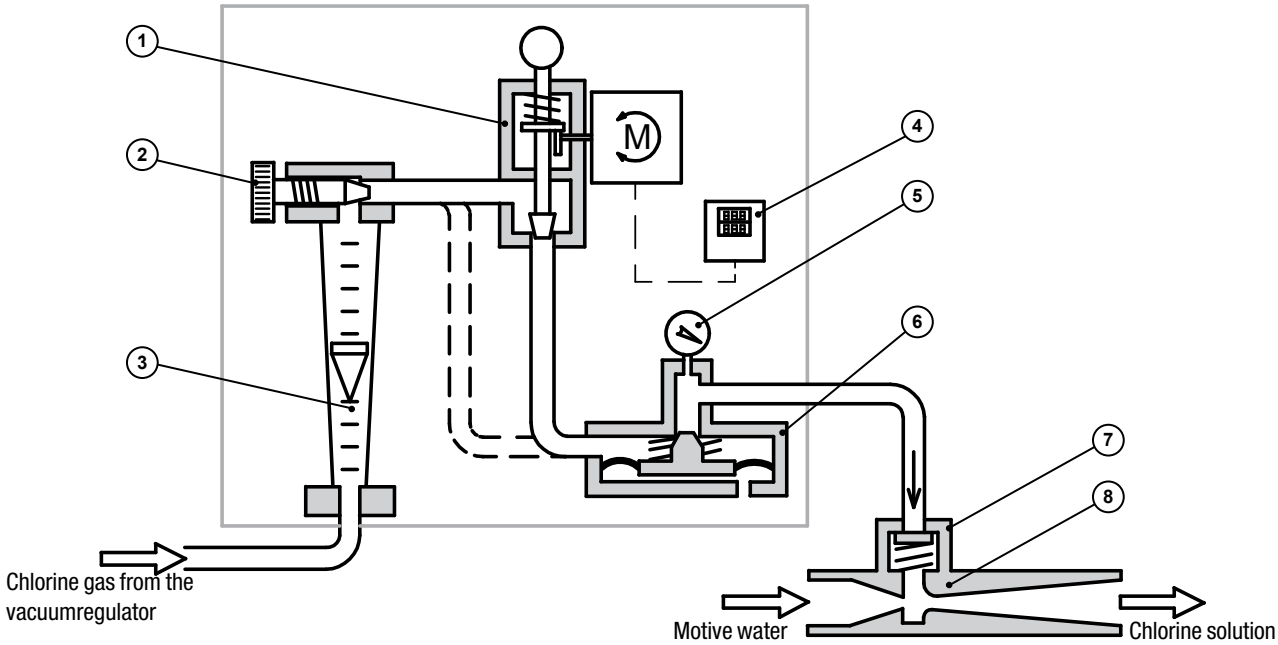

Fig. 4: Functional diagram C 2526

As the dosing device is connected to a vacuum regulator, chlorine can only flow if the injector (8) generates a sufficient vacuum.

The float in the flow meter (3) shows the current dosing quantity. It is set on the manual valve (2).

The majority of dosing devices are fitted with an electrically-actuated regulation valve (1) with which the dosing quantity can be adjusted automatically. In a number of cases, an additional signal converter (4) is provided, with which the dosing device can be adjusted minimally to the usage process.

The backpressure regulator (6) ensures a constant vacuum on the regulation valve and enables consistent dosing. Should the vacuum generated by the injector become stronger, the diaphragm disc moves upwards and reduces the flow cross-section. This produces a constant vacuum between the regulation valve and the backpressure regulator. The vacuum meter (5) shows the uncontrolled vacuum of the injector. A contact vacuum meter is optionally available, with which the injector function can be electrically monitored.

The chlorine is mixed with water in the injector (8) and flows into the metering point as a chlorine solution. Should the system come to a standstill, the non-return valve (7) protects the dosing device from water penetration.

© Lutz-Jesco GmbH 2016
Subject to technical changes.
160520

4.3 Rating plate

The rating plate contains information on the safety and functional method of the product. The rating plate must be kept legible for the duration of the service life of the product.

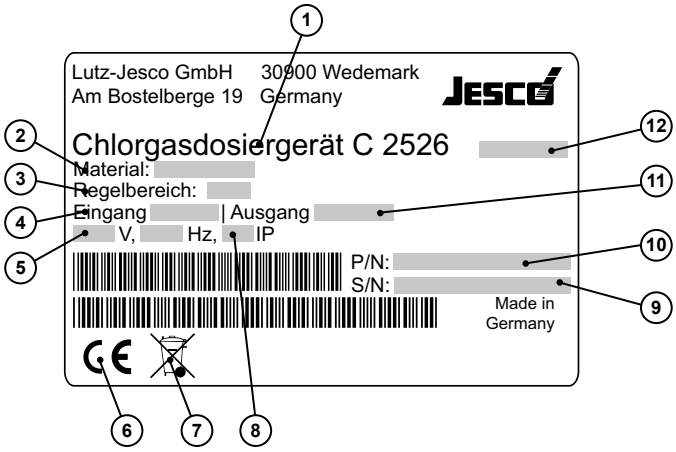

Fig. 5: Rating plate C 2526

No.	Description
1	Product name
2	Components coming into contact with the media
3	Control range
4	Control signal from the electrical regulation valve
5	Voltage supply
6	Label showing conformity with applicable European directives
7	WEEE label
8	Protection class (IP)
9	Serial number
10	Part number
11	Feedback signal from the electrical regulation valve
12	Month/year of manufacture

Table 6: Rating plate

© Lutz-Jesco GmbH 2016

5 Technical data

Description		Value
dosage range		5 / 10 / 15 / 25 kg/h Cl_2
Operating vacuum		- 100 mbar
Required injector vacuum		- 250 mbar
Adjustable flow		0 – 100 %
Flow meter	Length	300 mm
	Accuracy	± 2 % of final scale reading
	Scale ratio	1:20
	Material	Glass
Vacuum meter	Measuring range	-1 – 0 bar
	Size	Ø63 mm
	Accuracy	± 2.5 % of final scale reading
	Load capacity of optional contacts	50 V / 0.5 A / 10 W
Material in contact with the media	plastics	PVC, PMMA
	Springs	Hastelloy
	seals, diaphragms	FPM
Weight with electrical regulation valve and signal converter	Wall device	approx. 15 kg
	Free standing cabinet	approx. 43 kg
Ambient temperature		0 – 40 °C (avoid direct sunlight)
Air humidity		max. 95%, non condensing

Table 7: Technical data

The technical data for the electrical regulation valve and the signal converter are listed in the appendant documentation.

© Lutz-Jesco GmbH 2016
Subject to technical changes.
160520

6 Dimensions

All dimensions in millimetres (mm).

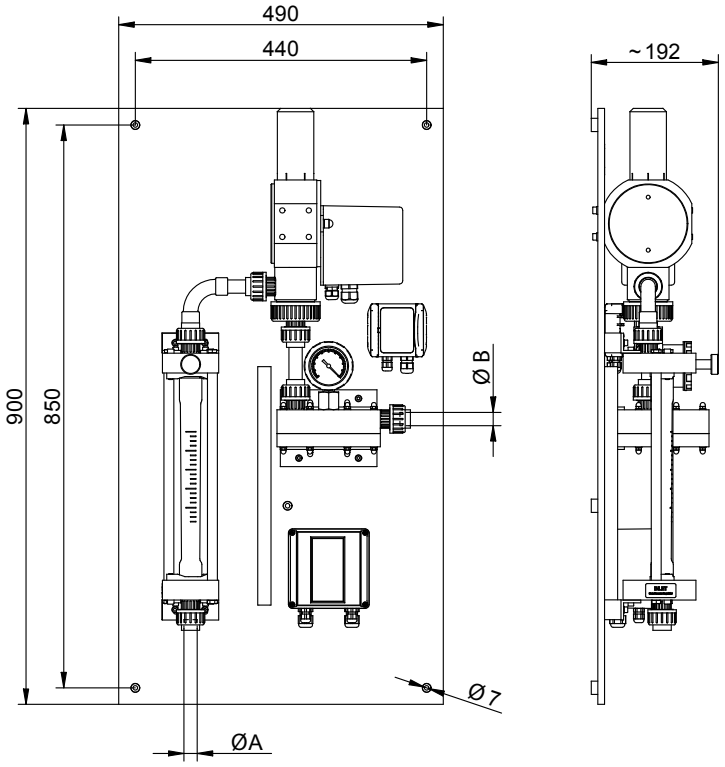

Fig. 6: Dimensioned drawing C 2526/WL

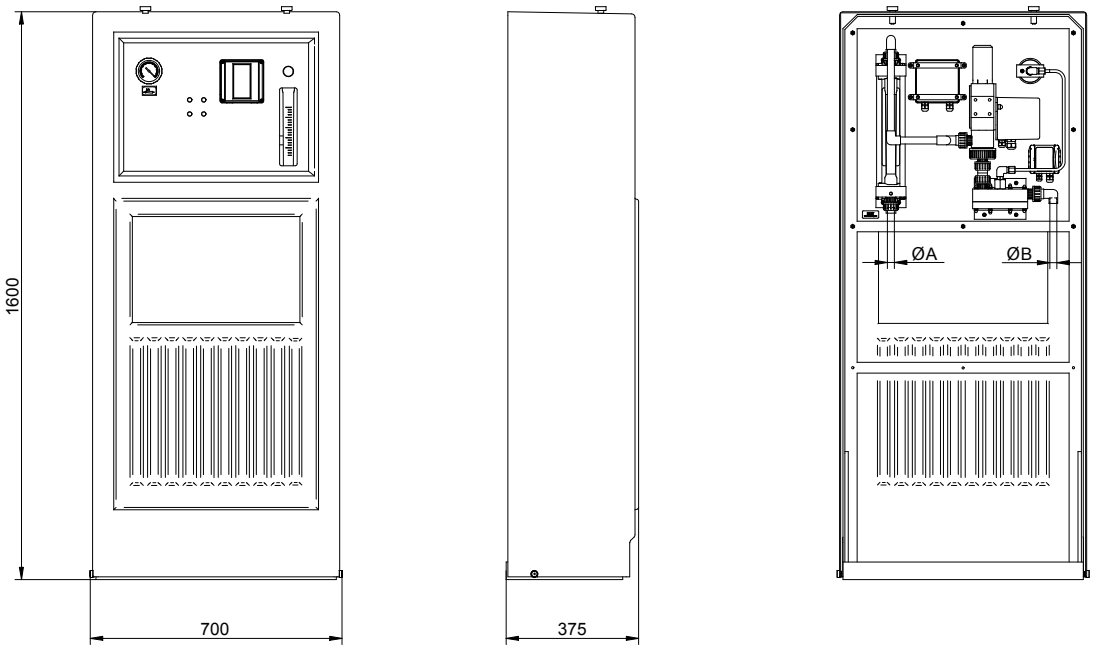

Fig. 7: Dimensioned drawing C 2526/SL

Power output	Input ØA and output ØB
up to 25 kg/h	PVC screw connection DN15 / Ø20 mm

Table 8: Hydraulic connections

© Lutz-Jesco GmbH 2016

7 Installation

DANGER!

Danger to life from chlorine poisoning!

Chlorinators without gas warning devices are an increased safety risk, since it is not possible to detect escaping chlorine gas in good time or at all.

⇨ Install a gas warning device.

WARNING!!

Increased risk of accidents due to insufficient qualification of personnel!

Chlorinators and their accessories must only be installed, operated and maintained by personnel with sufficient qualifications. Insufficient qualification will increase the risk of accidents.

⇨ Ensure that all action is taken only by personnel with sufficient and corresponding qualifications.

⇨ Prevent access to the system for unauthorised persons.

Note

Damage to the system due to incorrect installation

The failure to observe installation instructions (e.g. use of unsuitable tools, incorrect torque) can damage the system parts.

⇨ Use suitable tools.

⇨ Note the specified torque.

7.1 Installation location

The dosing device is usually installed together with the injectors in the dosing device room. We do not recommend installation in the same room as the chlorine gas supply.

The room must fulfil the following requirements:

- secured against access by unauthorised persons,
- protected against weather conditions,
- frost-free,
- permissible ambient temperature adhered to (see Section 5 "Technical data" on page 13),
- room of sufficient size to allow trouble-free assembly as well as inspection and maintenance of the device at all times,
- an electrical connection is given,
- the room can be ventilated well,
- the room must comply with the locally valid prescriptions.

© Lutz-Jesco GmbH 2016
Subject to technical changes.
160520

7.2 Installing the device

7.2.1 Installing the wall device

The wall device must be installed perpendicularly to the wall surface in a way that makes it easily accessible to the operator. The flow meter should be mounted at c. eye-level.

Precondition for action:

✓ A flat wall.

✓ The mounting material is suitable for the wall.

Resources required:

🛠 Water level

🛠 Drill

🛠 Fork wrench SW10

Perform the following working steps:

1. Hold the device against the wall and align it so that the flow meter is vertical.
2. Mark the mounting point on the wall.
3. Drill in the marked holes and insert the rawlplug.
4. Secure the wall panel with the screws and the washers included in the scope of delivery.

✓ **The device is fitted on the wall.**

7.2.2 Installing the cabinet

The cabinet is set up and installed on a level floor; often on a slightly-raised base. The device must be accessible for maintenance work from the rear.

Precondition for action:

✓ The floor is level.

✓ The mounting material is suitable for the wall.

Resources required:

🛠 Drill

🛠 Ring spanner SW 13

Perform the following working steps:

1. Remove the cover from the device (see fig. 9)
2. Place the device in the desired position. Ensure that the frame fits well and does not wobble.
3. Mark the anchor points on the floor and remove the device.
4. Drill in the marked holes and insert the rawlplug.
5. Return the device and screw it to the floor on all anchor points (see Fig. 9).
6. Return the cover (6).

✓ **The device is fitted on the floor.**

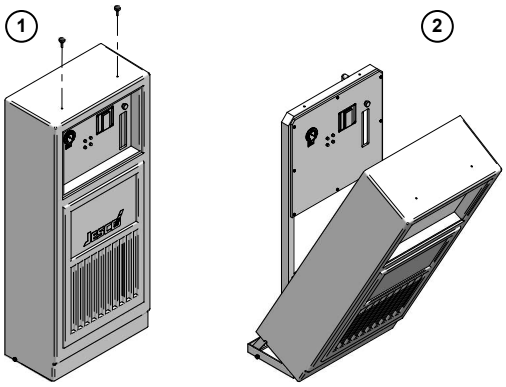

Fig. 8: Opening the cabinet

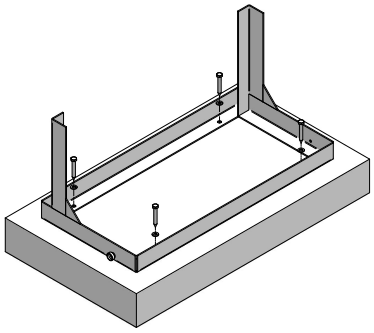

Fig. 9: Fixing the cabinet

© Lutz-Jesco GmbH 2016

7.3 Hydraulic installation

Use PVC-U pipes for the vacuum lines.

The following table indicate the required line sizes (nominal widths). Greater distances are bridged using larger nominal widths. With short sections, use nominal widths which correspond to the device connections.

Position	Meaning
①	Vacuum regulator
②	Dosing device
③	Injector
L_A-L_D	Lines on the device connection each c. 0.5m in the connection nominal width
L_1	Line in the nominal width in accordance with table 10
L_2	Line in the nominal width in accordance with table 11

Table 10: Long vacuum lines

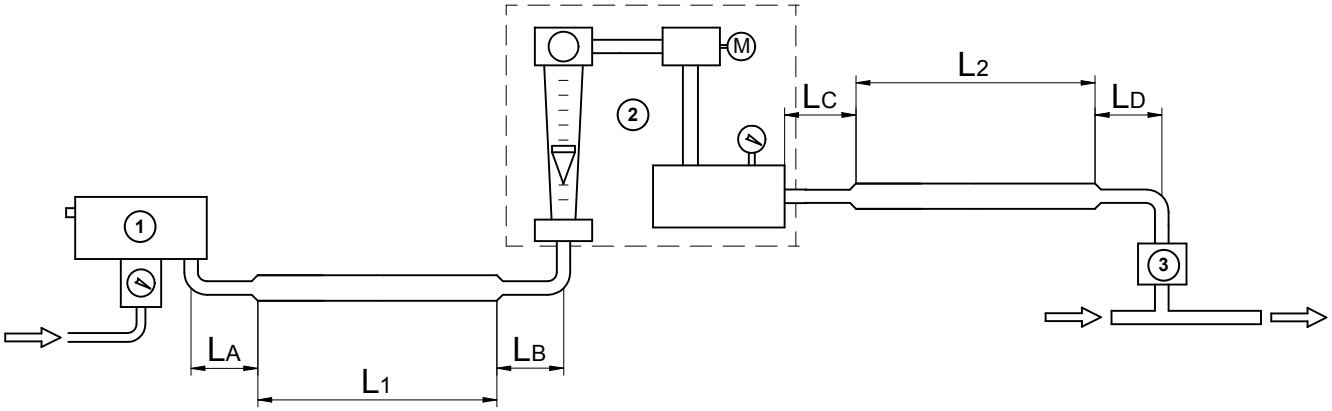

Fig. 10: Long vacuum lines

Line between the vacuum regulator and dosing device

The following nominal widths are recommended for the vacuum line (pressure loss max. 25 bar, calculated at 0.9 bar (a) with 4x90° angles):

Mass flow of chlorine	L_1: Length of the vacuum line between the vacuum regulator and the dosing device					
	5 m	10 m	20 m	30 m	50 m	100 m
5 kg/hr	DN 12	DN 12	DN 12	DN 12	DN 15	DN 15
10 kg/hr	DN 12	DN 15	DN 15	DN 15	DN 20	DN 20
15 kg/hr	DN 15	DN 15	DN 20	DN 20	DN 20	DN 25
25 kg/hr	DN 15	DN 20	DN 20	DN 25	DN 25	DN 32
40 kg/hr	DN 20	DN 25	DN 25	DN 32	DN 32	DN 40
60 kg/hr	DN 25	DN 32	DN 32	DN 32	DN 40	DN 40
80 kg/hr	DN 32	DN 32	DN 32	DN 40	DN 40	DN 50

Table 9: Recommended nominal width between the vacuum regulator and dosing device

If the line is to supply multiple dosing devices, the line should be calculated for the total of the consumption volume.

Line between the dosing device and injector

The following nominal widths are recommended for the vacuum line (pressure loss max. 25 bar, calculated at 0.75 bar (a) with 4x90° angles):

Mass flow of chlorine	L_2: Length of the vacuum line between the dosing device and the injector					
	5 m	10 m	20 m	30 m	50 m	100 m
5 kg/hr	DN 12	DN 12	DN 12	DN 12	DN 15	DN 20
10 kg/hr	DN 12	DN 15	DN 15	DN 20	DN 20	DN 20
15 kg/hr	DN 15	DN 15	DN 20	DN 20	DN 25	DN 25
25 kg/hr	DN 20	DN 20	DN 25	DN 25	DN 25	DN 32

Table 11: Recommended nominal width between the dosing device and injector

The recommended nominal width of the vacuum line to the injector is somewhat larger than that between the vacuum regulator and the dosing device, as the chlorine here has expanded a little greater.

© Lutz-Jesco GmbH 2016
Subject to technical changes.
160520

7.3.1 Service valves - example installation

If multiple dosing devices are connected in parallel, every device should be installed with valves so that the other devices can be kept operational during servicing work.

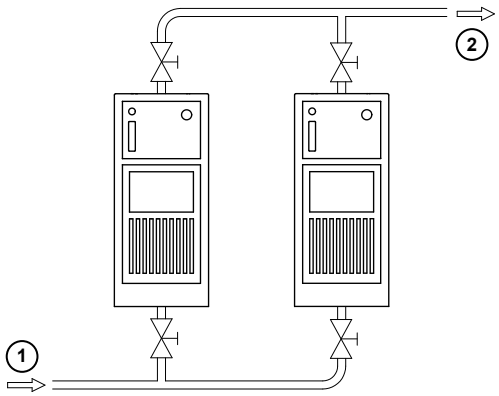

Fig. 11: Installation with service valves

No.	Meaning
1	from the vacuum regulator
2	to the ejector

Table 12: Installation with service valves

7.3.2 Make the PVC seal connection.

Precondition for action:

✓ The device is installed.

✓ The vacuum line is fixed with sufficient pipe clamps and meets the connection in an un-tensioned state.

✓ All parts are clean and dry.

✓ The transport protection on the connection has been removed.

Resources required:

- Pipe cutter
- File or chamfer tool
- PVC adhesive and cleaning agent
- Non-fuzzing paper towels

Perform the following working steps:

1. Cut the PVC pipe at right angles. Make a chamfer on the pipe exterior (c. 3mmx20°).
2. Clean the pipe and the bushing with the cleaning agent recommended by the manufacturer of the adhesive.
3. Glue the pipe in the connection. Follow the instructions on the PVC adhesive.

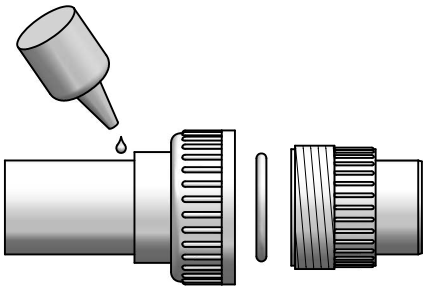

Fig. 12: Making the PVC seal connection

4. Mount the connection on the device. Ensure that the O-ring is fitted.
5. Tighten the union nut by hand.
6. Allow the bond to harden for at least 3 hours prior to the leak test.

✓ **PVC seal connection made.**

© Lutz-Jesco GmbH 2016

7.4 Electric installation

DANGER!

Mortal danger from electric shock!

Improperly installed or damaged components in the electronics installation can cause injury.

- ⇨ Ensure that all work on the electrical installation is performed by a qualified electrician.
- ⇨ Ensure that all work on the electrical installation is performed in a de-energised state.
- ⇨ Ensure that the power supply is secured with a fault current protective circuit.
- ⇨ Replace damaged cables or components without delay.

7.4.1 Electrical regulation valve

The electrical regulation valve is optional. Connection is made in accordance with the instructions either to the regulation valve or the servomotor.

7.4.2 Contact gauge

The vacuum meter is optional.

7.4.2.1 Connect the contact vacuum meter

Comply with the specifications regarding contact load capacity (see section 5 “Technical data” on page 13). The electrical connection is made at the terminal box integrated in the dosing device.

Perform the following working steps:

1. Open the terminal box by applying lateral pressure to the handle on the hinge. A tool is not required.
2. Mount the cable screw connection (appropriate size) to the cable cross-section.
3. Guide the cables into the terminal box and connect the cables using the clamps included in the scope of delivery.
4. Tighten the cable screw connections and close the terminal box to guarantee the IP protection class of the system.

✓ **Contact vacuum meter connected.**

Pressure gauge type	Cable colours	
Pressure gauge with 1 contact		White - brown
Pressure gauge with 2 contacts	Contact no. 1 (switches with a strong vacuum)	White - brown
	Contact no. 2 (switches with a weak vacuum)	Yellow - green

Table 13: Cable assignments contact pressure gauge

7.4.2.2 Switch point of the contact vacuum meter adjusted.

Usually, the following situations are signalled according to the system configuration:

Situation	Possible cause	Recommended switch point
Insufficient vacuum	Fault on the injector	-0.2 bar
Vacuum too strong	Fault in the chlorine supply	-0.7 bar

Table 14: Function s of the contact vacuum meter

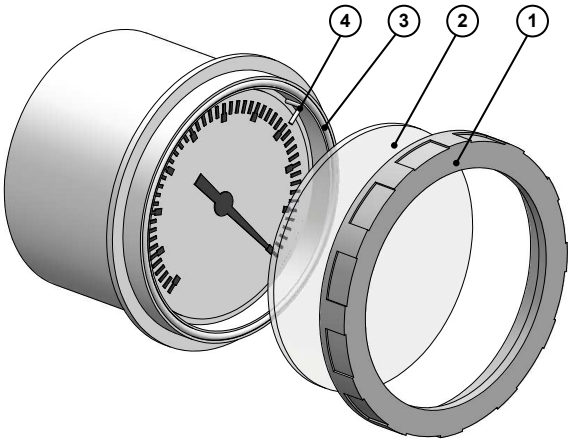

Fig. 13: Adjusting the switch point

Perform the following working steps:

1. Remove the transparent lid (2) from the contact vacuum meter. To do so, unscrew the outside ring (1) from the device. Observe the seal (3)
2. Move the red marking (4) on the desired switch point.
3. Refit the transparent lid and tighten the ring nut by hand. Ensure the correct position of the seal.

✓ **Switch point of the contact gauge adjusted.**

7.4.3 Signal converter

The signal converter is optional, offered for use only with a 230 V/4…20 mA control valve. The connection is made in accordance with a separate set of instructions. As delivered, the connection between the control valve and the signal converter is already complete.

© Lutz-Jesco GmbH 2016
Subject to technical changes.
160520

7.5 Completing the installation

The cable screw connections must be tightened and all housings closed after assembly in order to ensure the IP protection class of the installation.

Any paint coverings damaged during assembly must be repaired to prevent corrosion from an aggressive atmosphere.

All union nuts on the screw connections of the piping are tightened by hand.

7.6 Installation example

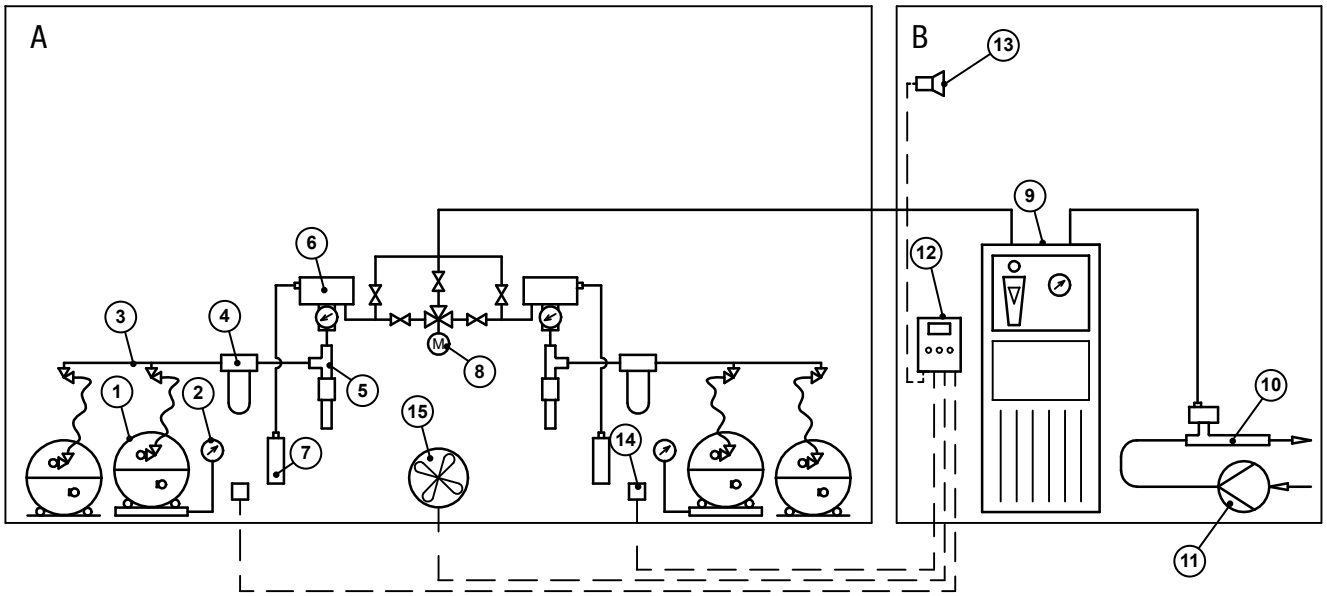

Fig. 14: Installation example

Position	Description
A	Room for the chlorine gas supply
B	Dosing device room
1	Chlorine barrel
2	Chlorine barrel scale
3	Pressurised manifold
4	Chlorine gas filter
5	Moisture eliminator with heating collar
6	Vacuum regulator
7	Activated carbon cartridge

Position	Description
8	Changeover unit with 5 service valves
9	Dosing device
10	Injector with non-return valve
11	Motive water pump
12	Gas warning device
13	Horn
14	Gas sensor
15	Entrance port of the chlorine eliminator

Table 15: Designation of components

© Lutz-Jesco GmbH 2016

8 Control

8.1 Controls

#

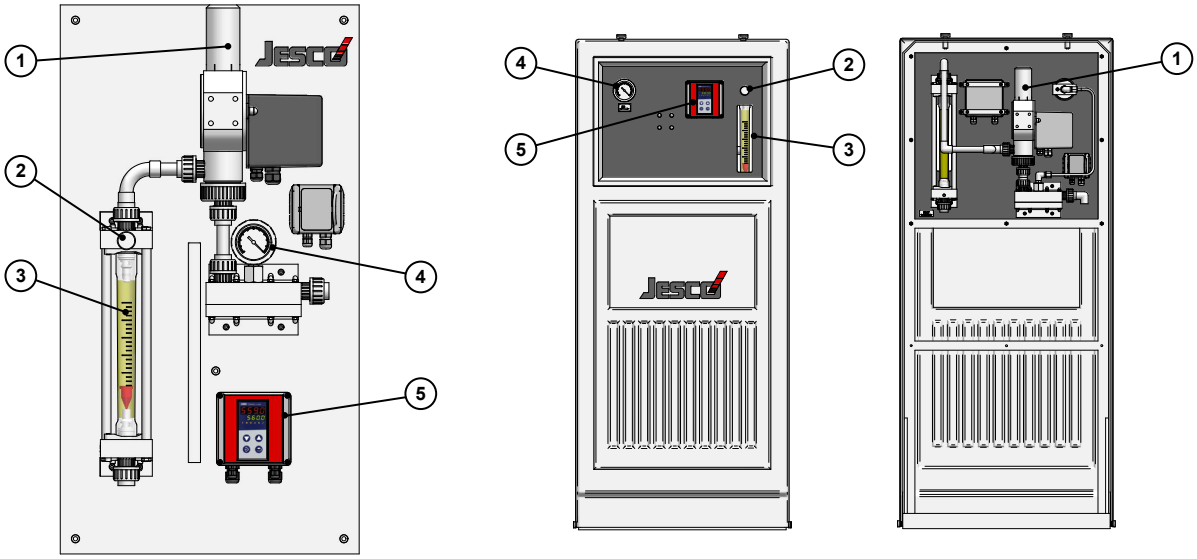

Fig. 15: Controls

No.	Description
1	Hand activation on the electrical regulation valve (optional)
2	Manual dosing valve
3	Flow indication
4	Vacuum indication
5	Signal converter (optional)

Table 16: Elements in the device

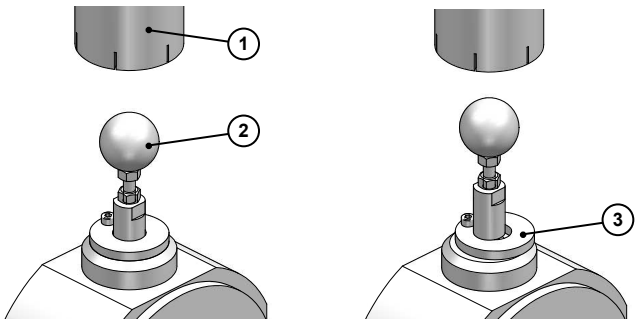

Fig. 16: Switching the control valve

8.2 Manual operation

The electrical regulation valve must be completely opened for manual operation. To this end, the valve spindle is locked in the upper position.

Perform the following working steps:

1. Remove the upper protective cover (1) on the electrical control valve.
2. Grasp the ball knob (2) and pull the valve spindle upwards against the spring force.
3. Swing the locking washer (3) into the groove.
4. Release the ball knob.
5. Set the dosing quantity on the manual dosing valve.

✓ **The electrical valve is locked in the OPEN position.**

8.3 Automatic operation

The manual dosing valve must be completely opened for automatic operation. To do so, the manual dosing valve is opened c. 10 revolutions.

The electrical control valve must be completely opened for automatic operation.

Perform the following working steps:

1. Remove the upper protective cover (1) on the electrical control valve.
2. Grasp the ball knob (2) and pull the valve spindle upwards against the spring force.
3. Swing the locking washer (3) out of the groove into the central position.
4. Let the valve spindle be pulled downwards by the spring force and release the ball knob.
   - The dosing quantity follows the electrical control signal automatically.

✓ **Device switched to automatic operation.**

© Lutz-Jesco GmbH 2016
Subject to technical changes.
160520

9 Start-up

9.1 Checking the vacuum system

Note

Operating faults through leakages in the vacuum system

Small leaks in the vacuum system will not be recognised in normal operation, since no chlorine escapes. Air will enter the system with moisture. The moisture can combine with the chlorine to create deposits and operating malfunctions.

With the injector switched off, there may be a slight chlorine smell.

⇨ Check the vacuum system.

⇨ Ensure that all action is taken only by personnel with sufficient and corresponding qualifications.

The leak-tightness of the vacuum system is inspected together with the vacuum regulator.

Precondition for action:

✓ The vacuum system is fully assembled.

✓ All the open connections of the vacuum system were closed.

✓ The injector is ready for operation.

Perform the following working steps:

1. Interrupt the chlorine supply. To do so, either connect the tank valve of a valve in the supply line to the vacuum regulator.
2. Open the manual dosing valve on the dosing device.
3. Lock the valve spindle of the electrical control valve in the open position.
4. Switch on the injector and wait until the vacuum pressure gauge displays at least -0.5 bar.
5. Switch off the injector.
   ▶ The vacuum must stay unchanged for at least five minutes.
6. If the vacuum collapses quickly, eliminate the leak and repeat the check on the vacuum system.

✓ **Vacuum system checked**

Note

Damage of the gauge

The search for leaks in the vacuum system often uses compressed air or nitrogen with a slight positive pressure as the leak point can then be recognised using a soapy solution. This test damages the contact gauge.

⇨ Dismantle the contact gauge before checking the vacuum system with positive pressure.

9.2 Turning on the device

Precondition for action:

✓ The device is fully assembled.

✓ The leak test was performed.

Perform the following working steps:

1. Switch the electrical regulation valve to manual operation (see section 8.2 on page 21)
2. Switch the injector on.
3. Open the chlorine supply.
4. Set the dosing quantity on the manual dosing valve. Observe the application process to prevent overdosing. Adapt the dosing quantity is necessary.

➔ With automatically controlled systems, now adjust the measurement amplifier and controller. Then switch the electrical regulation valve to automatic operation (see section 8.3 on page 21)

✓ **Device switched on.**

9.3 Adapting the power output

If the dosing capacity of the device is considerably higher than required, the maximum dosing capacity can be reduced for automatic operation. Depending on the optional fitting of the dosing device, this reduction can be performed on the signal converter or the electrical regulation valve. See the separate instructions for this device.

The maximum dosing capacity in manual operation is not altered by the settings.

Note

Poor control from the PID controller

Many operating companies restrict the output of their automatic dosing device on the manual dosing valve. This is easy, but interferes with the functioning of the PID controller for the application process.

⇨ Use the functions of the electrical valve or the signal converter to adapt the power.

© Lutz-Jesco GmbH 2016

10 Operation

10.1 Setting the dosing quantity

The dosing quantity is set automatically for devices with an electrical control valve; a manual setting is not necessary.

The dosing quantity can be set manually on all devices.

Precondition for action:

✓ The injector is switched on.

✓ The chlorine supply is switched on.

Perform the following working steps:

1. If an electrical regulation valve is fitted, switch to manual operation (see section 8.2 on page 21)
2. Adjust the manual dosing valve (see Fig. 16 on page 21) until the flow meter displays the desired dosing quantity.
   - Turning in a clockwise direction: Reduces the dosing quantity
   - Turning counterclockwise: Increases the dosing quantity.

✓ **Dosing quantity is set.**

> The dosing valve can be closed until the flow meter no longer displays any flow. It is not a shutoff valve however.

10.2 Shutting down in an emergency

DANGER!

Danger to life from chlorine poisoning!

Chlorine is poisonous. In severe cases, breathing in chlorine may lead to death. It irritates the eyes, the respiratory system and the skin.

⇨ If chlorine escapes, leave the room immediately.

⇨ Use sufficient personal protective equipment.

⇨ If chlorine gas escapes, wear a Type 2 self-contained breathing apparatus that complies with EN 137.

⇨ Only initiate counter measures after putting on the protective equipment.

⇨ Given a serious escape and insufficient equipment or qualifications, leave the work to professional emergency services personnel. Do not take any unnecessary risks.

The measures depend on the type of accident and should be planned and executed by professional personnel.

10.3 Test intervals

The tasks described here are to be performed by the operating company. Further work on the device is described in the section "maintenance" and can only be performed by qualified personnel.

The components of the chlorination installation must be subject to a daily visual check. Inform service personnel of anything conspicuous or a chlorine smell.

Check the following on the dosing device:

- The flow meter display
- Th vacuum meter display

© Lutz-Jesco GmbH 2016
Subject to technical changes.
160520

11 Shutdown

11.1 Short-term shutdown

Perform the following working steps:

1. Close the chlorine tank valves.
2. Use the injector to suck off the remaining chlorine.
3. If present, connect the service valve between the dosing device and the injector.
4. Switch off the injector.

✓ **Chlorinator shut down for the short term.**

11.2 Long-term shutdown

Perform the following working steps:

1. Close the chlorine tank valves.
2. Use the injector to suck off the remaining chlorine.
3. Run the chlorinator for approximately five minutes with nitrogen or dry compressed air.
4. If present, connect the service valve between the dosing device and the injector.
5. Switch off the injector.
6. Close all the open connections to protect the lines and devices from humidity and dirt.

✓ **Chlorinator shut down for the long term.**

The device remains in the installation location during the operating pause. All connections remain closed. The voltage supply should remain active so that condensate is unable to gather in the electrical devices.

Ensure ideal storage conditions where possible:

- the storage place must be cold, dry, dust-free and generously ventilated,
- temperatures between +2 °C and +40 °C.
- Relative air humidity must not exceed 90 %.

> We recommend a minimum of a minor maintenance after a longer standstill period (see "maintenance intervals" on page 25).

11.3 Disposal of old equipment

- Before disposing of the old equipment, you must clean off the remaining chlorine by rinsing it with nitrogen or air.
- The device must be disposed of in accordance with applicable local laws and regulations. It should not be disposed of as domestic waste!

As the disposal regulations may differ from country to country, please consult your supplier if necessary.

In Germany, the manufacturer must provide free-of-charge disposal. provided the device has been safely returned along with a declaration of no objection (see page 43).

© Lutz-Jesco GmbH 2016

12 Maintenance

Products by Lutz-Jesco are manufactured to the highest quality standards and have a long service life. However, some parts are subject to operational wear. This means that regular visual inspections are necessary to ensure a long operating life. Regular maintenance will protect the device from operation interruptions.

DANGER!

Mortal danger from electric shock!

Live parts can inflict fatal injuries.

⇨ Before carrying out any maintenance work, always disconnect the device from the power supply.

⇨ Secure the system to prevent it from being switched on by accident.

DANGER!

Danger to life from chlorine poisoning!

Do not carry out maintenance or any other work on the chlorinator until the system has been decommissioned and all of the chlorine gas has been removed from the lines. The failure to follow this instruction presents a significant risk of injury.

⇨ Prior to any maintenance work, prepare the system in accordance with section 12.3 „Preparing the system for maintenance“ on page 25.

12.1 Maintenance intervals

Subject the chlorinator to regular maintenance, to prevent malfunctions. Perform the maintenance in the following intervals:

Interval	Maintenance
After 1 year	Minor maintenance: ■ Cleaning the device ■ Replacing the connection seals ■ Renew the seals on the manual dosing valve ■ Functional control ■ Check the settings
After 3 years	Major maintenance: ■ Cleaning the device ■ Replace all seals ■ Renew the diaphragm ■ Replace the spring. ■ Functional control ■ Check the settings

Table 17: Maintenance intervals

Interval	Maintenance
After 5 years	■ Replace the vacuum meter

Table 17: Maintenance intervals

In some cases, regional regulations may require shorter maintenance intervals. Carry out maintenance before recommissioning the system after a long period out of service. Maintenance intervals not depend only on how frequently the equipment is used. Chemical wear, for example of rubber parts, begins with the initial medium contact and continues irrespective of the usage.

12.2 Maintenance accessories

Description	Part number
Silicone grease, medium viscosity 35 g for application to seals	35537
Key for fitting the diaphragm (Qty 2 required)	25268
Plastic tools for dismantling O-rings	W00133

Table 18: Maintenance accessories

The spare parts for maintenance are provided by Lutz-Jesco GmbH as a maintenance set. See section 14.7 „Maintenance sets“ on page 41.

12.3 Preparing the system for maintenance

Perform the following working steps:

1. Close the valves of the chlorine tank.
2. Use the injector to suck off the remaining chlorine.
3. Run the chlorinator for approximately five minutes with nitrogen or dry compressed air.
4. Switch off the injector.

✓ **The system is prepared for maintenance.**

12.4 Minor maintenance:

Precondition for action:

✓ The system is prepared in accordance with section 12.3 „Preparing the system for maintenance“ on page 25.

✓ The fitting maintenance set is available.

© Lutz-Jesco GmbH 2016
Subject to technical changes.
160520

12.4.1 Cleaning the device

The device is only cleaned from outside. Interior cleaning is only required in the following cases:

- Heavy soiling in the flow meter
- Malfunctions

12.4.2 Replacing the connection seals

The seals in all pipe unions are replaced.

Perform the following working steps:

1. Loosen the union nuts and remove the O-rings with a blunt tool.
2. Clean the sealing surfaces with a soft cloth.
3. Look into the interior of the connection. Should a lot of soiling be visible, the device requires cleaning from inside.
4. Fit the new O-rings and the connections. The union nuts are tightened by hand.

✓ **Connection seals renewed.**

12.4.3 Renewing the seals on the dosing valve

Pre-conditions for actions:

🛠 Cotton swabs

🛠 Cleaning alcohol

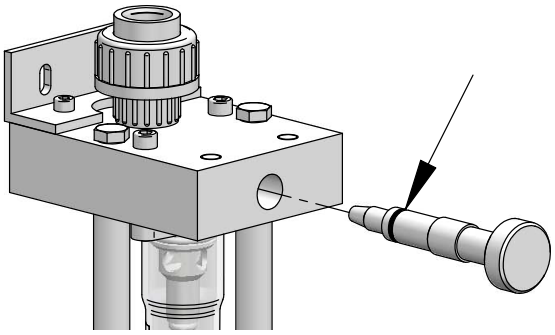

Fig. 17: Seal on the dosing valve

Perform the following working steps:

1. Unscrew and remove the valve spindle on the flow meter.
2. Remove the O-ring with a blunt tool.
3. Clean the O-ring groove with a damp cloth and if necessary, with a little alcohol.
4. Clean the drillhole in the head of the flow meter with a cotton bud soaked in alcohol.
5. Mount the new O-ring on the valve spindle. Rub the O-ring with a little silicone grease.
6. Insert the valve spindle and screw it in until you feel real resistance.
7. Unscrew in the valve spindle by 10 revolutions.

✓ **Seal is renewed.**

12.4.4 Finishing the minor maintenance

After completing the maintenance, perform a functional check in accordance with section 12.9 „Functional control“ on page 29.

12.5 Maintenance on the flow meter

> For an overview of the components of the flow meter, see section 14.2 „Flow meter“ on page 33.

The flow meter is cleaned and all elastomers are replaced.

Precondition for action:

✓ The system is prepared in accordance with section 12.3 „Preparing the system for maintenance“ on page 25.

✓ The fitting maintenance set is available.

🛠 Cotton swabs

🛠 Cleaning alcohol

© Lutz-Jesco GmbH 2016

12.5.1 Dismantling the flow meter

Perform the following working steps:

1. Dismantle the complete flow meter including the mounting angle (1) from the dosing device.
2. Remove the four screws (6) and remove the spacer rods (11).
3. Loosen the screws (7) on the upper and lower limits (14, 19).
4. Holding onto the measuring glass (16), remove the screws and the limits, and remove the inlet block (12) and the outlet block (8) from the flow meter.
5. Carefully remove the limits from the measuring glass whilst twisting them slightly.
6. Unscrew in the valve spindle (10).
7. Remove the O-ring (9) with a blunt tool.

✓ **Flow meter dismantled.**

12.5.2 Cleaning the flow meter:

Perform the following working steps:

1. Clean all parts thoroughly with a soft cloth. Warm water or alcohol is suitable for this purpose.
2. Clean the glass tube with e.g. warm water and a flat brush.
3. Perform a visual check on all parts. Pay especial attention to the drillhole for the manual dosing valve and the sealing surfaces for the flat gaskets. Replace the damaged parts.

✓ **Flow meter cleaned.**

12.5.3 Mounting the flow meter

Precondition for action:

✓ All parts have been dried well after cleaning.

✓ All parts are in a good condition.

Perform the following working steps:

1. Place the O-ring (13) between the lower limit (14) and the inlet block (12). Secure the lower limit with the two screws (7).
2. Mount the O-ring (15) in the groove of the lower limit. Rub it with silicone grease lightly.
3. Repeat steps 1 and 2 with the upper limit (19) and the outlet block (8).
4. Mount the small thick O-ring (18) on the taps of the upper limit.
5. Slide the measuring glass (16) onto the lower limit rotating it a little.
6. Place the float (17) in the measuring glass and slide the upper limit in the measuring glass.
7. Place this units on a level surface so that the PVC blocks are aligned well.
8. Hold the spacer rods (11) between the inlet and outlet blocks (12, 8) and mount the screws (6).
9. Mount the new O-ring (9) on the valve spindle (10). Rub the O-ring with a little silicone grease. The thread is not greased.
10. Screw the valve spindle into the outlet block until you feel clear resistance.
11. Unscrew in the valve spindle by 10 revolutions.

✓ **Flow meter mounted.**

12.6 Maintenance on the electrical regulation valve

The electrical regulation valve is optional. Comply with the instructions in the operating manual of the regulation valve during maintenance.

12.7 Maintenance of the back-pressure regulator

> For an overview of the components of the back-pressure regulator, see section 14.5 „Back-pressure regulator“ on page 38.

The back-pressure regulator is cleaned and all elastomers are replaced.

Precondition for action:

✓ The system is prepared in accordance with section 12.3 „Preparing the system for maintenance“ on page 25.

✓ The fitting maintenance set is available.

🛠 Cleaning alcohol

🛠 2 wrenches for mounting the diaphragm

🛠 Silicone grease

12.7.1 Dismantling the back-pressure regulator

Perform the following working steps:

1. Dismantle the complete back-pressure regulator including the mounting angle (7) from the dosing device.
2. With cabinets, the vacuum meter remains in the device. With wall devices, dismantle the pressure gauge. Seal the entry of the pressure gauge to prevent the penetration of air moisture. Further information about the vacuum meter can be found in section 12.8 „Cleaning the vacuum meter“ on page 28.
3. Mark the direction of installation of all housing sections and the mounting angle with a waterproof marker.
4. Remove the eight threaded rods (17, 18).
5. The spring force presses the housing sections apart. Remove the diaphragm disc (13) and the spring (12).
6. Loosen the clamping ring (15) on the diaphragm (14). Use the key for mounting the diaphragm.
7. Unscrew the reduction (1) from the upper housing section.

✓ **Back-pressure regulator dismantled.**

12.7.2 Cleaning the back-pressure regulator

Perform the following working steps:

1. Clean all parts thoroughly with a soft cloth. Warm water or alcohol is suitable for this purpose.
2. Allow all components to dry well.

© Lutz-Jesco GmbH 2016
Subject to technical changes.
160520

3. Perform a visual check on all parts. Pay especial attention to the tensioning surfaces for the diaphragm and the hemisphere contour on the diaphragm disc. Replace the damaged parts.

✓ **Back-pressure regulator cleaned**

12.7.3 Fitting the back-pressure regulator

Precondition for action:

✓ All parts have been dried well after cleaning.

✓ All parts are in a good condition.

Mounting the diaphragm disc

Perform the following working steps:

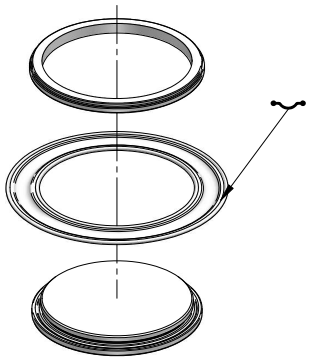

Fig. 18: Mounting the diaphragm disc

1. Hold the diaphragm disc (13) with the level surface facing upwards. Moisten the thread lightly with silicone grease.
2. Rub the inner edge of the diaphragm (14) with silicone grease lightly.
3. Place the diaphragm on the diaphragm disc with the dome pointing downwards and place on the clamping ring (15).
   ▶ The side with the groove and elevation faces the diaphragm.
4. Tighten the clamping ring by hand. Then tighten by max. ½ revolution using the tool.

✓ **Diaphragm disc mounted**

Mount the housing

1. Rub the outer wheel with silicone grease lightly.
2. Place the diaphragm disc in the lower housing section (16). The diaphragm is arched upwards and the hemisphere on the diaphragm disc remains visible.
   Ensure that the diaphragm sits correctly.
3. Insert the spring (12).
4. Place on the upper housing (11) section. Turn both housing sections against each other with slight pressure.
   ▶ The diaphragm slides into the correct position.
5. Insert the threaded rod (17, 18). The two longer threaded rods (18) hold the mounting angle at the same time (7). The position of the mounting angle depends on the form of the device. Cabinet or wall device. Observe the markings made during dismantling.
6. Mount the washers (6) and cap nuts (5). Tighten the nuts crosswise with approx. 1 Nm.

✓ **Housing mounted**

Mounting the back-pressure regulator in the device

1. Fit an O-ring (2) to the reduction (1) for the vacuum meter. With the cabinet, the hose connection is screwed in with PTFE strips. Clean the vacuum meter in accordance with section 12.8 „Cleaning the vacuum meter“ on page 28. Mount the vacuum meter only after cleaning.
2. Mount the back-pressure regulator in the dosing device Tighten the screws with approx. 1 Nm.
3. Reconnect the pipes. Use the new O-rings in the screw connections.

✓ **Back-pressure regulator fitted.**

12.8 Cleaning the vacuum meter

Note

Damage to pressure gauges

Pressure gauges are measurement devices which are adjusted by specialists when manufactured. Pressure gauges that have been disassembled must be tested and readjusted by the manufacturer.

⇨ Do not dismantle pressure gauges.

⇨ Do not allow any soiling to enter the pressure gauge.

⇨ Do not allow any water to enter the pressure gauge.

The maintenance on the vacuum meter restricts itself to a visual check and the cleaning of the connection.

Precondition for action:

✓ The system is prepared in accordance with section 12.3 „Preparing the system for maintenance“ on page 25.

🛠 PTFE strip

🛠 Cotton swabs

🛠 Cleaning alcohol

Perform the following working steps:

1. If the device is fitted with electrical contacts, branch off the cable. Note the cable assignments.
2. Dismantle the vacuum meter from the dosing device
3. Remove the PTFE strip from the thread.
4. Check the input of the vacuum meter for soiling. Remove the soiling with cleaning alcohol. At the same time, hold the device with the connection facing downwards so that soiling cannot fall into the device. Do not use a pointed tool, so that the protective film on the plate spring is not destroyed.
5. If the pressure gauge is not immediately reconnected, seal the connection airtight.
6. Fit the vacuum meter with approx. 5 long PTFE strips.
7. With a cabinet, fit a new hose between the vacuum meter and the back-pressure regulator.
8. If necessary, reconnect the cable.

✓ **Vacuum meter cleaned.**

© Lutz-Jesco GmbH 2016

12.9 Functional control

12.9.1 Leak test

Precondition for action:

✓ All the open connections of the vacuum system were closed.

✓ The injector is ready for operation.

Perform the following working steps:

1. Close the chlorine gas supply.
2. Open the manual dosing valve on the dosing device.
3. Switch the electrical regulation valve to manual operation.
4. Switch on the injector and wait until the vacuum pressure gauge displays at least -0.5 bar.
5. Switch off the injector.
   ▶ The vacuum must stay unchanged for at least five minutes.
6. If the vacuum collapses quickly, eliminate the leak and repeat the check on the vacuum system.

✓ **Leak test performed**

12.9.2 Check the dosing

Precondition for action:

✓ The leak test was performed.

✓ The chlorine gas supply has been secured.

Perform the following working steps:

1. Switch the injector on.
2. Open the chlorine gas supply.
3. Set the dosing quantity on the manual dosing valve. It must be settable from 0 to 100%.

✓ **The dosing has been controlled.**

> An insufficient vacuum means that the dosing device cannot provide the full dosing capacity. If the vacuum does not amount to a minimum of -0.25 during dosing, check the operating data of the injector.

12.10 Finishing maintenance

Perform the following working steps:

1. Make a note of the date and scope of the maintenance performed.
2. Attach a sticker displaying the maintenance date to the device.
3. Tighten all the cable screw connections.
4. To restart the system, proceed in accordance with the instructions in section 9 „Start-up“ on page 22.

✓ **Maintenance completed.**

© Lutz-Jesco GmbH 2016
Subject to technical changes.
160520

13 Troubleshooting

All possible errors are listed in this table.

Problem	Possible cause	Remedy
Dosing capacity too low	Insufficient chlorine supply	Connect sufficient chlorine drums
	Chlorine gas filter blocked	Clean or exchange the filter element
	Supply pressure too low	Increase the outlet pressure of the pressure reducing valve
	Insufficient vacuum	See below
	Lines too small	See section 7.3
Dosing quantity cannot be set manually	The electrical regulation valve is incomplete	Lock the electrical regulation valve in the opened position (Chapter 8.2)
Dosing capacity cannot be set manually	The manual dosing valve has not been opened completely	Open the manual dosing valve completely (section 8.3)
	The electrical regulation valve is locked in the open position	Switch the valve to automatic operation (section 8.3)
Insufficient vacuum	Leak in the vacuum system	Tighten all screw connections in the vacuum line. Check the O-rings
	Reduced injector performance from ■ deposits in the injector ■ Soiling in the motive water filter ■ excess pressure loss on the injector non-return valve	■ Perform maintenance on the injector ■ Clean the filter ■ Measure the back pressure and compare with the technical data from the injector
Soiling in the flow meter	Insufficient chlorine quality	See section 3.2
	Slight leak in the vacuum system means penetration of a little moisture, which results in soiling.	Find leaks and redress them.
Water in the device	Leaky injector non-return valve	Perform maintenance on the injector non-return valve

Table 19: Troubleshooting

© Lutz-Jesco GmbH 2016

14 Spare parts

14.1 Housing SL

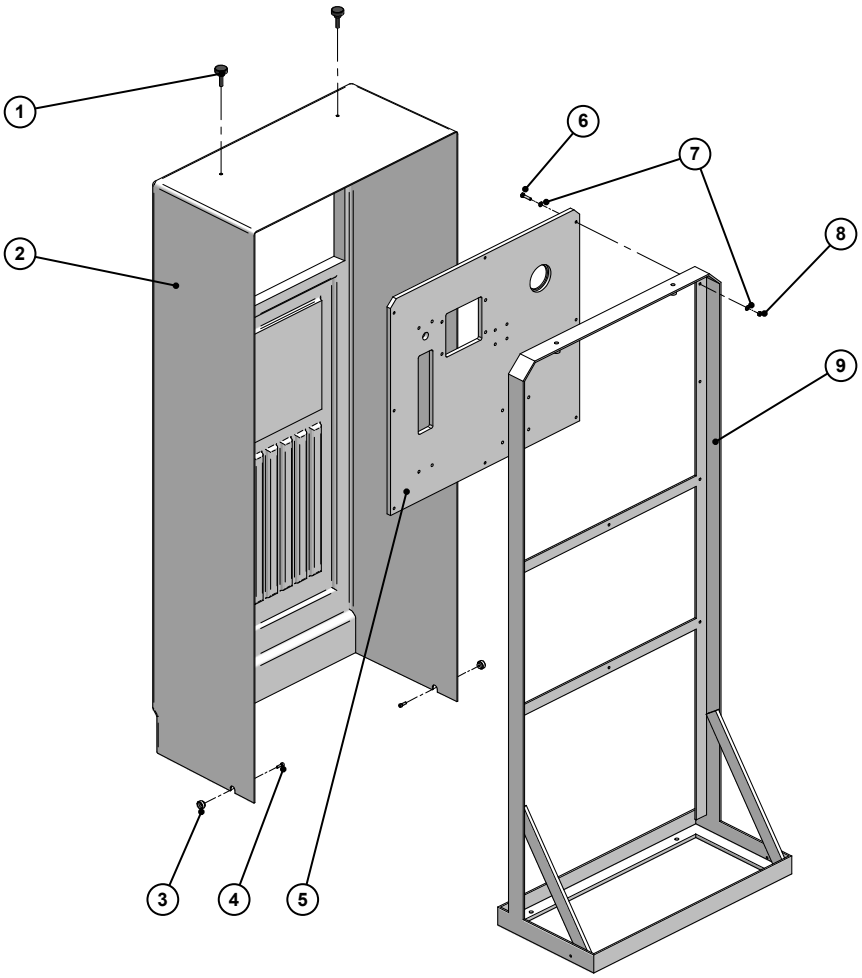

Fig. 19: Housing for C 2526 SL

Position	No.	Description
1	2	Knurled knob M6x25
2	1	Hood cabinet
3	2	Knurled nut
4	2	Screw
5	1	Mounting plate
6	8	Screw
7	16	Washer
8	8	Hexagon nut
9	1	Base frame

Table 20: Housing for C 2526 SL

© Lutz-Jesco GmbH 2016

14.2 Flow meter

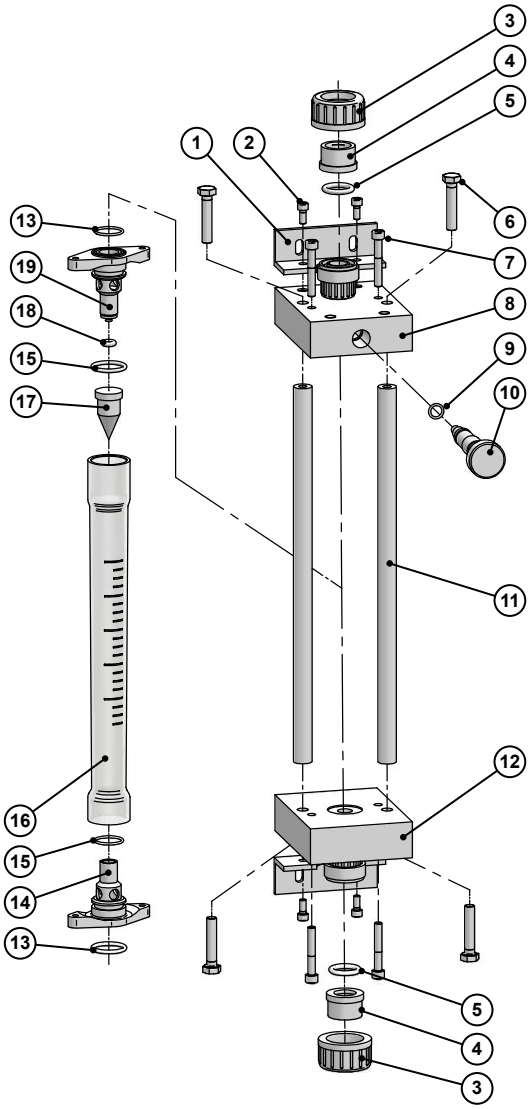

Fig. 20: Flow meter for C 2526

Position	No.	Description
1	2	Mounting angle
2	4	Screw (mounting angle)
3	2	Union nut
4	2	Flange bushing
5	2	O-ring (screw connection)
6	4	Screw (spacer rod)
7	4	Screw (full extent)
8	1	Outlet block
9	1	O-ring (valve spindle)
10	1	Valve spindle
11	2	Spacer rod
12	1	Inlet block
13	2	O-ring (upper and lower limit)
14	1	Lower limit
15	2	O-ring
16	1	Measuring glass
17	1	Float element
18	1	O-ring (small, upper limit)
19	1	Upper limit

Table 21: Flow meter C 2526

© Lutz-Jesco GmbH 2016
Subject to technical changes.
160520

14.3 Module overview SL

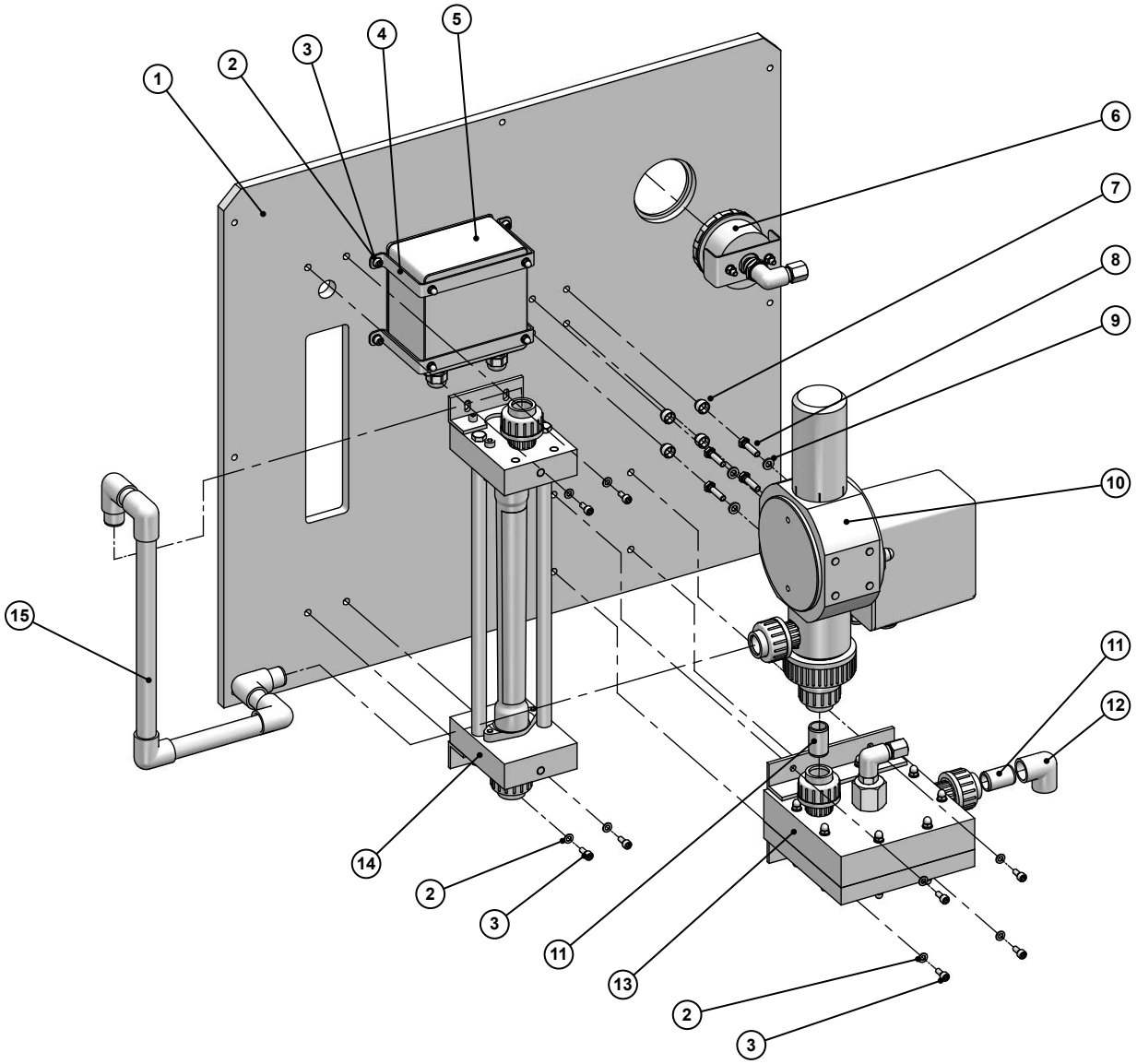

Fig. 21: Modules C 2526 SL

© Lutz-Jesco GmbH 2016

Item	No.	Description
1	1	Mounting plate
2	12	Washer (signal converter / flow meter / back-pressure regulator)
3	12	Screw (signal converter / flow meter / back-pressure regulator)
4	2	Mounting yoke
5	1	Signal converter (optional)
6	1	Vacuum meter
7	4	Protective cap
8	4	Screw (regulation valve)
9	4	Washer (regulation valve)
10	1	Electrical regulation valve
11	2	Pipe, short
12	1	Angle
13	1	Back-pressure regulator
14	1	Flow meter
15	1	Pipe, long

Table 22: Module overview SL

© Lutz-Jesco GmbH 2016
Subject to technical changes.
160520

14.4 Overview of modules WL

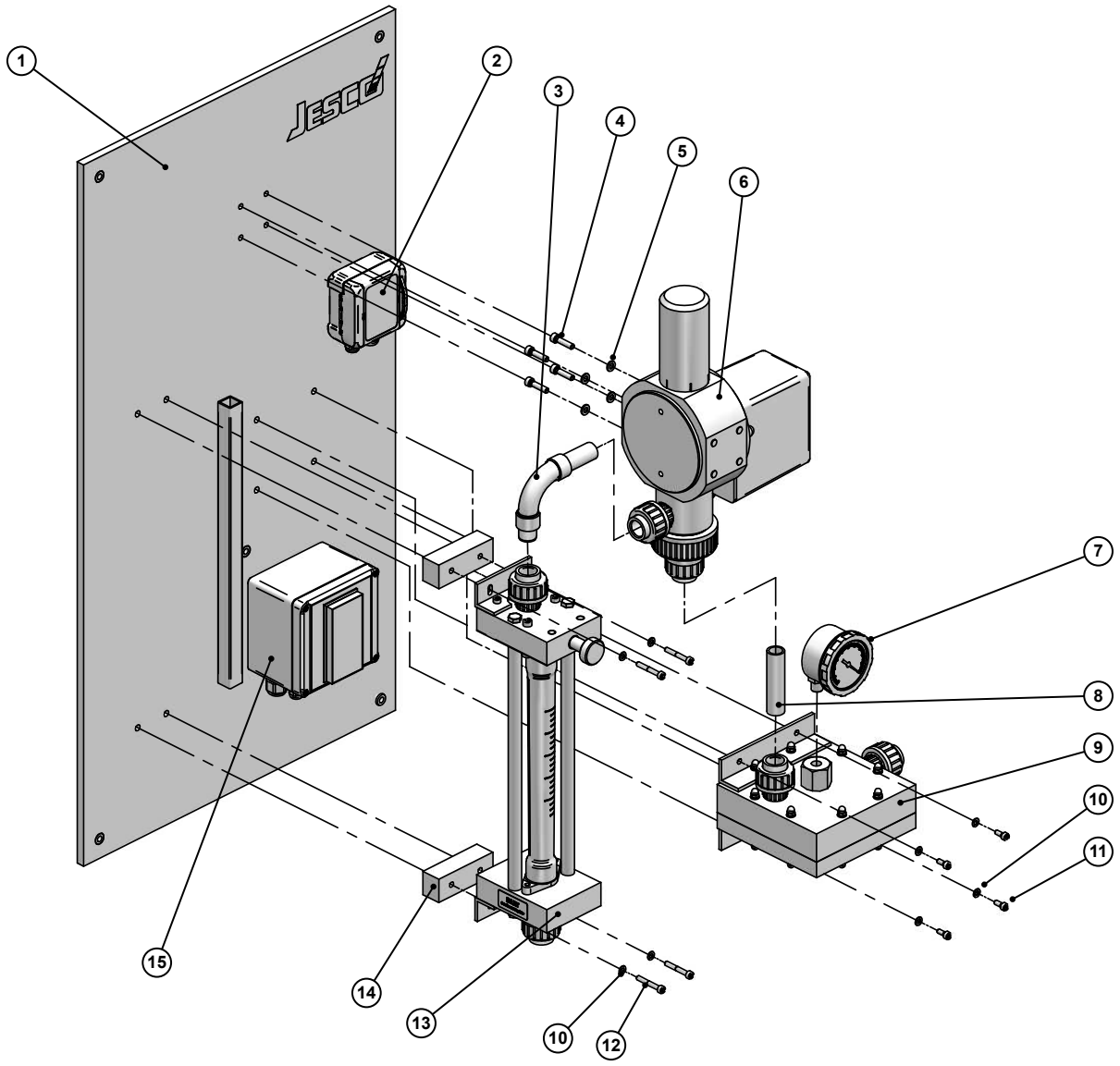

Fig. 22: Overview of modules WL

© Lutz-Jesco GmbH 2016

Item	No.	Description
1	1	Mounting plate
2	1	Terminal box (optional)
3	1	Pipe with bend
4	4	Screw (regulation valve)
5	4	Washer (regulation valve)
6	1	Electrical regulation valve
7	1	Vacuum meter
8	1	Pipe
9	1	Back-pressure regulator
10	8	Washer (flow meter / back-pressure regulator)
11	4	Screw (back-pressure regulator)
12	4	Screw (flow meter)
13	1	Flow meter
14	2	Distance block
15	1	Signal converter (optional)

Table 23: Module overview SL

© Lutz-Jesco GmbH 2016
Subject to technical changes.
160520

14.5 Back-pressure regulator

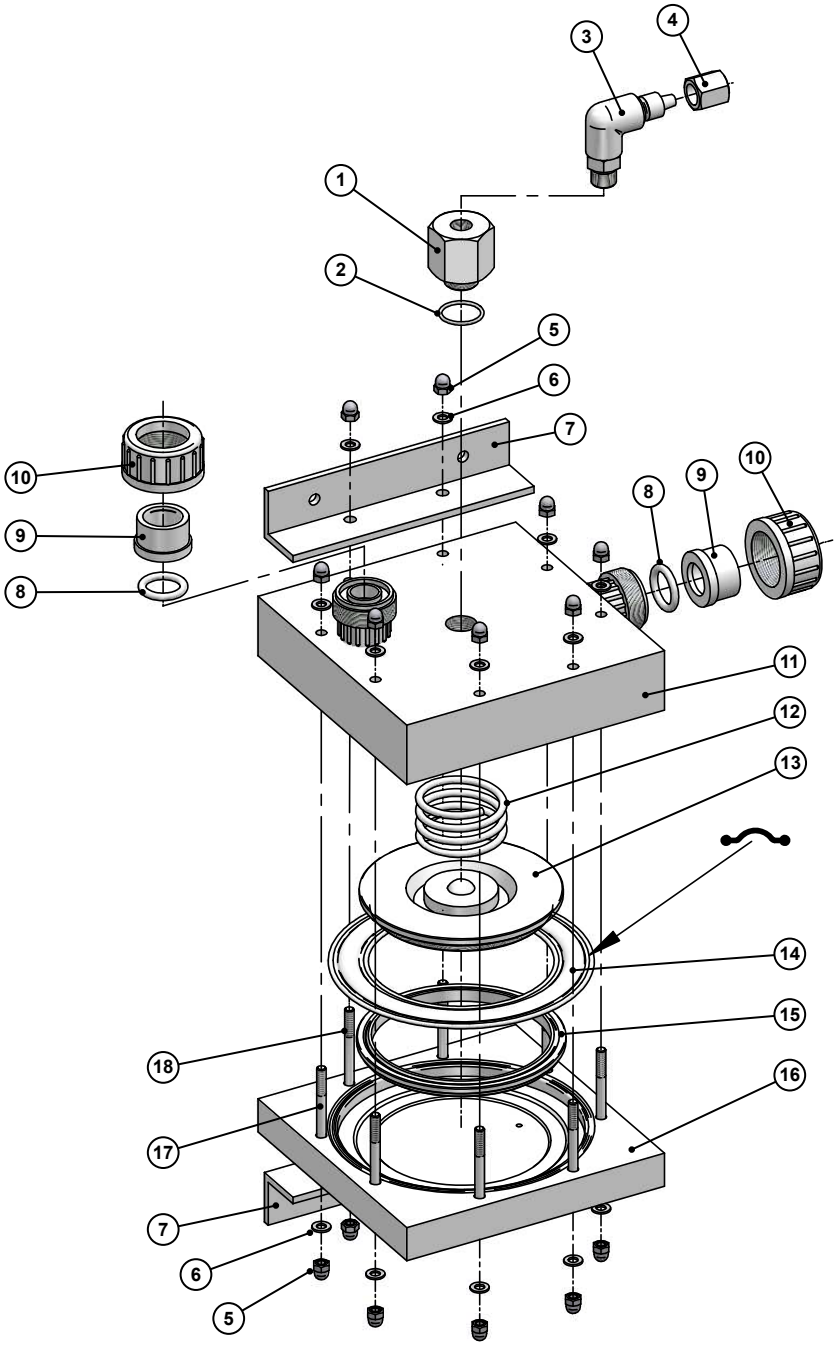

Fig. 23: Back-pressure regulator C 2526

© Lutz-Jesco GmbH 2016

Item	No.	Description
1	1	Reduction
2	1	O-ring (reduction)
3	1	Bracket with hose connection (only C 2526 SL)
4	1	Union nut for hose (only C2526 SL)
5	16	Cap nut
6	16	Washer
7	2	Mounting angle
8	2	O-ring (hose connection)
9	2	Flange bushing
10	2	Union nut
11	1	Upper housing part
12	1	Spring
13	1	Diaphragm disc
14	1	Diaphragms
15	1	Hose clamp
16	1	Lower housing section
17	6	Threaded rod 66 mm
18	2	Threaded rod 74 mm

Table 24: Module overview SL

© Lutz-Jesco GmbH 2016
Subject to technical changes.
160520

14.6 Vacuum meter SL / WL

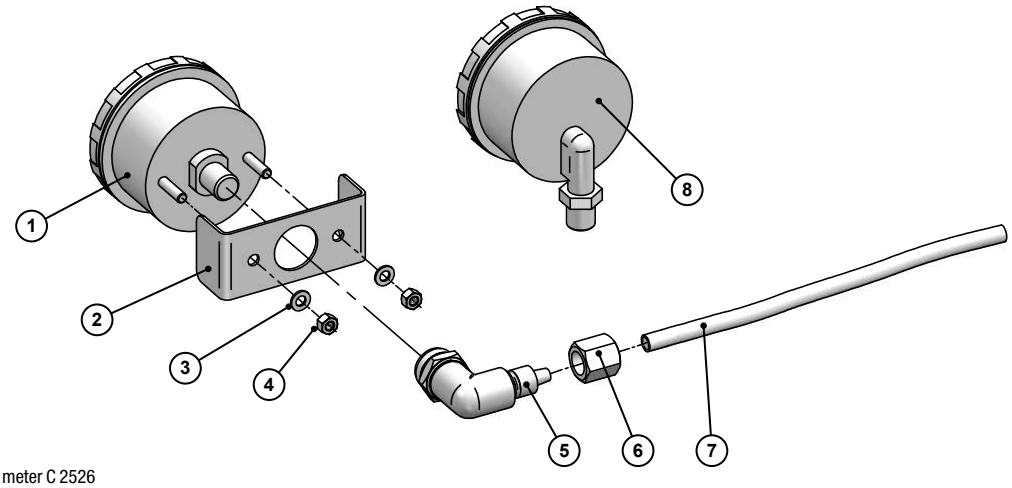

Fig. 24: Vacuum meter C 2526

Item	No.	Description
1	1	Vacuum meter (C 2526/SL)
2	1	Bracket
3	2	Washer
4	2	Hexagon nut
5	1	Angle with hose connection
6	1	Union nut
7	1	Hose
8	1	Vacuum meter (C 2526 WL)

Table 25: Vacuum meter C 2526 SL / WL

© Lutz-Jesco GmbH 2016

14.7 Maintenance sets

Part	Content	Article no.
		5 … 25 kg/h
Small maintenance kit (for annual service)	■ Connection seals ■ Seal for the manual dosing valve	41556
Large maintenance set (after 3 years)	■ All seals ■ Diaphragms ■ Springs ■ PTFE strip ■ Silicone grease ■ Hose piece	C 2526 **without electrical device regulation valve**
		41557
		C 2526 **with electrical regulation valve**
		41558

Table 26: Maintenance sets

© Lutz-Jesco GmbH 2016
Subject to technical changes.
160520

15 EC Declaration of Conformity

(DE) EG-Konformitätserklärung
Hiermit erklären wir, dass das nachfolgend bezeichnete Gerät aufgrund seiner Konzipierung und Bauart sowie in der von uns in Verkehr gebrachten Ausführung den einschlägigen grundlegenden Sicherheits- und Gesundheitsanforderungen der aufgeführten EG-Richtlinien entspricht. Bei einer nicht mit uns abgestimmten Änderung am Gerät verliert diese Erklärung ihre Gültigkeit.

(EN) EC Declaration of Conformity
We hereby certify that the device described in the following complies with the relevant fundamental safety and sanitary requirements and the listed EC regulations due to the concept and design of the version sold by us.
If the device is modified without our consent, this declaration loses its validity.

(FR) Déclaration de conformité CE
Nous déclarons sous notre propre responsabilité que le produit ci-dessous mentionné répond aux exigences essentielles de sécurité et de santé des directives CE énumérées aussi bien sur le plan de sa conception et de son type de construction que du modèle que nous avons mis en circulation.
Cette déclaration perdra sa validité en cas d'une modification effectuée sur le produit sans notre accord explicite.

(ES) Declaración de conformidad CE
Por la presente declaramos que, dados la concepción y los aspectos constructivos del modelo puesto por nosotros en circulación, el aparato mencionado a continuación cumple con los requisitos sanitarios y de seguridad vigentes de las directivas de la U.E. citadas a continuación.
Esta declaración será invalidad por cambios en el aparato realizados sin nuestro consentimiento.

(NL) EU-overeenstemmingsverklaring
Ondergetekende Lutz-Jesco GmbH, bevestigt, dat het volgende genoemde apparaat in de door ons in de handel gebrachte uitvoering voldoet aan de eis van, en in overeenstemming is met de EU-richtlijnen, de EU-veiligheidsstandaard en de voor het product specifieke standaard. Bij een niet met ons afgestemde verandering aan het apparaat verliest deze verklaring haar geldigheid.

(PT) Declaração de conformidade CE
Declaramos pelo presente documento que o equipamento a seguir descrito, devido à sua concepção e ao tipo de construção daí resultante, bem como a versão por nós lançada no mercado, cumpre as exigências básicas aplicáveis de segurança e de saúde das directivas CE indicadas.
A presente declaração perde a sua validade em caso de alteração ao equipamento não autorizada por nós.

Bezeichnung des Gerätes:	Chlorgas-Dosiergerät
Description of the unit:	Chlorinator
Désignation du matériel:	Appareil de dosage de chlore gazeux
Descripción de la mercancía:	Aparato dosificador de cloro gaseoso
Omschrijving van het apparaat:	Chloorgas doseereenheid
Designação do aparelho:	Aparelho de doseamento de gás de cloro
Typ: **Type:**	C 2526
EG-Richtlinien: **EC directives:**	2006/42/EG, 2014/30/EU Die Schutzziele der Niederspannungsrichtlinie 2014/35/EU wurden gemäß Anhang I, Nr. 1.5.1 der Maschinenrichtlinie 2006/42/EG eingehalten. The protective aims of the Low Voltage Directive 2014/35/EU were adhered to in accordance with Annex I, No. 1.5.1 of the Machinery Directive 2006/42/EC.
Harmonisierte Normen: **Harmonized standards:**	EN ISO 12100, EN 61000-6-1, EN 61000-6-3
Dokumentationsbevollmächtigter: **Authorized person for documentation:**	Lutz-Jesco GmbH

Heinz Lutz
Geschäftsführer / Chief Executive Officer
Lutz-Jesco GmbH
Wedemark, 01.05.2016

Lutz-Jesco GmbH
Am Bostelberge 19
30900 Wedemark
Germany

© Lutz-Jesco GmbH 2016

16 Declaration of no objection

Please copy the declaration, stick it to the outside of the packaging and return it with the device.

Declaration of no objection

Please fill out a separate form for each appliance!

We forward the following device for repairs:

Device and device type: ..... Part-no.:.....

Order No.:..... Date of delivery: .....

Reason for repair: .....

.....

.....

Dosing medium

Description: ..... Irritating: ☐ Yes ☐ No

Properties: ..... Corrosive: ☐ Yes ☐ No

We hereby certify, that the product has been cleaned thoroughly inside and outside before returning, that it is free from hazardous material (i.e. chemical, biological, toxic, flammable, and radioactive material) and that the lubricant has been drained.

If the manufacturer finds it necessary to carry out further cleaning work, we accept the charge will be made to us.

We assure that the aforementioned information is correct and complete and that the unit is dispatched according to the legal requirements.

Company / address:..... Phone:.....

..... Fax:.....

..... Email:.....

Customer No.:..... Contact person: .....

Date, Signature:.....

© Lutz-Jesco GmbH 2016
Subject to technical changes.
160520

17 Warranty Application

Warranty Application

Please copy and send it back with the unit!

If the device breaks down within the period of warranty, please return it in a cleaned condition with the complete warranty application, filled out.

Sender

Company: ..... Phone: ..... Date: .....

Address: .....

Contact person: .....

Manufacturer order no.: ..... Date of delivery: .....

Device type: ..... Serial number: .....

Nominal capacity / nominal pressure: .....

Description of fault: .....

.....

.....

.....

.....

.....

.....

.....

Service conditions of the device

Point of use / system designation: .....

.....

.....

Accessories used (suction line etc.): .....

.....

.....

.....

.....

Commissioning (date): .....

Duty period (approx. operating hours): .....

Please describe the specific installation and enclose a simple drawing or picture of the chemical feed system, showing materials of construction, diameters, lengths and heights of suction and discharge lines.

© Lutz-Jesco GmbH 2016

18 Index

C
Checking the vacuum system 22

D
Dimensioned drawings 14
Dimensions 14
Disposal of old equipment 24
Dosing media
  Prohibited dosing media 9

E
EC Declaration of Conformity 42
Electrical installation 19, 21

G
General warnings 6

H
Handling instructions
  Marking 5
Hazards due to non-compliance with the safety instructions 7

I
Installation 15, 16
  electrical 19, 21
Installation examples 20
Installing the device 16
Intended purpose 9
Intended use 9

L
Long-term shutdown 24

M
Maintenance 25
  Accessories 25
  Maintenance intervals 25
Maintenance accessories 25

N
Notes for the Reader 4

O
Operation 23

P
Personal protective equipment 7
Personnel qualification 7
Personnel tasks 8
Product description 10
Product warranty 9
Prohibited dosing media 9

R
Rating plate 12

S
Safety 6
Scope of delivery 10
Short-term shutdown 24
Shutdown 24
Signal words
  Explanation 4
Spare parts 32
Specialist staff 7
Start-up 22
Structure of the device 10
Switching on 22

T
Technical data 13
Trained electricians 7
Trained persons 7
Troubleshooting 30
Turning on the device 22

W
Warnings
  General warnings 6
  Marking 4
Warning sign
  Explanation 4
Warranty claim 44
Working in a safety-conscious manner 7

© Lutz-Jesco GmbH 2016
Subject to technical changes.
160520

© Lutz-Jesco GmbH 2016