C 2214

Vacuum Regulator for Chlorine Gas

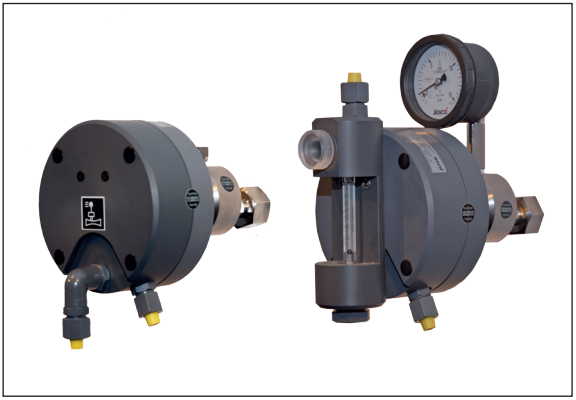

EN 02

Operation & Maintenance Instructions

Read these operation and maintenance instructions before start up!

To be held for future reference.

Dosing | *Liquids*
Conveying | *Gases*
Control | *Systems*

Table of Contents

1 Safety ... 3
1.1 General ... 3
1.2 Warnings used in this Operation & Maintenance Manual ... 3
1.3 Qualification and training of personnel ... 3
1.4 Hazards due to non-compliance with the safety instructions ... 4
1.5 Safe operation ... 4
1.6 Safety instructions for the owner/operator ... 4
1.7 Safety instructions for installation, maintenance and inspection ... 4
1.8 Unauthorized modification and production of spare parts ... 4
1.9 Impermissible modes of operation ... 4
1.10 Dosing of Chemicals ... 5
1.11 Special notes for working with chlorine gas metering units and the usage of chlorine ... 6

2 Before placing in operation ... 7
2.1 Compliant use ... 7
2.2 Scope of delivery ... 7
2.3 Steps to take for start-up ... 7

3 Functional principle of the vacuum regulator ... 8
3.1 Chlorine Gas ... 8
3.2 Vacuum regulator ... 8
3.3 Technical data ... 10
3.4 Dimensions ... 11

4 General ... 12

5 Installation ... 13
5.1 Chlorine delivery ... 13
5.2 Design of the piping system ... 14
5.3 Installation of units ... 17

6 Start up ... 18
6.1 Leakage test ... 18
6.2 Starting the system ... 18

7 Operation ... 19
7.1 Cylinder exchange ... 19

8 Switching off ... 20

9 Maintenance ... 21
9.1 Dismounting of the complete vacuum regulator ... 21
9.2 Check ... 25

10 Troubleshooting ... 27

11 Accessories ... 28

12 Installation examples ... 30
12.1 Individual installation of full-vacuum chlorinators directly on the chlorine cylinder ... 30
12.2 Manifold with one vacuum regulator for each cylinder line ... 30
12.3 Schematic diagram of a complete chlorination installation ... 31

13 Maintenance kits ... 32

14 Unit revision ... 32

15 Declaration of harmlessness ... 33

16 EC Declaration of Incorporation ... 34

17 Warranty Application ... 35

1 Safety

1.1 General

This Operating & Maintenance Manual contains basic information to be noted during installation, operation and maintenance. It is therefore essential that the Manual be read by the contractor before installing and commissioning the pump/system, as well as by the relevant operating personnel / owner of the pump/system. It must remain accessible at the pump/system for reference at all times. In addition to the general safety instructions under this main heading Safety, the special safety precautions outlined in other sections must also be observed.

1.2 Warnings used in this Operation & Maintenance Manual

This Operation & Maintenance Manual contains vital information which may endanger people, the environment and the dosing pump/system if they are disregarded. These statements are identified by the following symbols:

DANGER!

Refers to an imminent danger.

Non-compliance can lead to death or extremely serious injury.

WARNING!

Refers to a potentially hazardous situation. Non-compliance can lead to death or extremely serious injury.

CAUTION!

Refers to a potentially hazardous situation. Non-compliance can lead to minor injury or property damage.

NOTICE!

Appears in conjunction with safety instructions which may endanger the product and its operation if disregarded.

IMPORTANT!

Draws attention to supplementary information to make the work easier and ensure troublefree operation.

Markings which are affixed directly to the product, such as

- Connection markings
- Markings for electrical connections
- Warning signs

must be observed without fail and must remain fully legible at all times.

1.3 Qualification and training of personnel

The personnel employed for installation, operation, inspection, and maintenance, must be suitably qualified for this work. The areas of responsibility, competence and supervision of the personnel must be precisely defined by the owner. Personnel who do not have the required know-how must be duly trained and instructed. If necessary, this training can also be provided by the manufacturer/supplier on behalf of the products owner. In addition, the owner must also ensure that the relevant personnel are fully familiar with and have understood the contents of the Operation & Maintenance Manual.

1.4 Hazards due to non-compliance with the safety instructions

Failure to comply with the safety instructions may endanger not only people, but also the environment and the product/system. Non-compliance with the safety instructions can lead to the loss of all entitlement to damages. The following hazards in particular may arise:

- Failure of major system functions.
- Failure of specified methods for maintenance and repair.
- Danger to people due to electrical, mechanical and chemical effects.
- Danger to the environment due to leakage of hazardous substances.

1.5 Safe operation

The safety instructions contained in this Operation & Maintenance Manual must be observed. The owner is responsible for ensuring compliance with local safety regulations.

1.6 Safety instructions for the owner/operator

Leakages must immediately be eliminated by specialist staff in order to avoid potential hazards for persons and environment. Statutory regulations must be observed.

Danger due to electric power must be excluded (for further details, refer to the VDE regulations and the regulations of the local public utilities).

1.7 Safety instructions for installation, maintenance and inspection

The owner must ensure that all maintenance, inspection and installation work is undertaken by authorized and duly qualified skilled personnel who have also studied the Operation & Maintenance Manual in depth.

Before carrying out installation and maintenance works, always make sure that the unit is not connected to the system. The procedure specified in the Operation & Maintenance Manual for shutting down the system must be observed without fail.

The device or the system and all material-conveying parts must be vented. All safety mechanisms and guards must be refitted and reactivated as soon as the work is complete.

The points set out in the section Installation and commissioning must be observed before starting the pump/system.

1.8 Unauthorized modification and production of spare parts

Modifications of the system are not permitted. Genuine spare parts and accessories authorized by the manufacturer ensure greater safety. Liability for damage or loss may be voided if non Lutz-Jesco parts are used.

1.9 Impermissible modes of operation

The operational safety of the product supplied can only be guaranteed when it is used in conformity with its intended use as specified in our contract documents-, especially the order confirmation. The limit values specified in these documents must never be exceeded.

1.10 Dosing of Chemicals

CAUTION!

When working on dosing systems, the accident prevention regulations applicable on site must be observed and the specified personal protective equipment worn.

We recommend the following protective equipment:

Respirator mask

Protective gloves

Protective clothing

Safety shoes

All people responsible for installation and maintenance of pumps, piping, hoses and accessories should wear this protective equipment.

Before working on the dosing systems and plant, disconnect it from the mains supply and protect it against reconnection.

Lock the main valve and if available the auxiliary valve of the chlorine gas cylinders. Before opening the main and auxiliary valves and before reactivating the power supply, make sure to connect the metering lines. Working on the dosing plant requires special safety precautions and may only be carried out by instructed technical personnel.

1.11 Special notes for working with chlorine gas metering units and the usage of chlorine

DANGER!
Chlorine is a hazardous material. The chemical element chlorine is a green-yellow, toxic gas with pungent odor. It is 2.5 times heavier than air and accumulates at ground level. It is toxic when breathed in. In severe cases chlorine may lead to death. It irritates the eyes, the respiratory system and the skin. It is very toxic for water organisms. The reason for the toxicity of chlorine is its extraordinary reactivity. It reacts with animal and vegetable tissue and thus destroys it.

Air with a chlorine content of 0.5-1% leads to a quick death of mammals and humans, because the respiratory tract and the pulmonary alveolus are attacked (formation of hydrogen chloride or hydrochlorid acid).

DANGER!
Breathing in air with a chlorine content of 0.01% for hours may lead to mortal intoxications. Already a chlorine content of only 0.001% (10 ppm) severely attacks the lungs. 0.0001% (1 ppm) of chlorine in breathing air irritates the respiratory systems and is easily detected due to its odour. It is not hazardous in this case. The threshold limit value is at 0.5 ppm.

In order to avoid hazardous incidents, make sure to do a maintenance of the chlorine gas metering units at least once a year. In some cases, regional regulations may require shorter intervals of maintenance. Working on the system requires special safety precautions and may only be carried out by instructed technical personnel.

The operating personnel must be instructed and must know all operating instructions and regional regulations. These must be available on site. The devices/system must be checked daily and after each maintenance or repair work for leak tightness.

DANGER!
Leakages may cause a chlorine gas escape. Breathing in chlorine gas may lead to death! Make sure to immediately eliminate any leakage. For all work on gas-conveying system parts, make sure to wear a functioning respirator mask with filter and and to evacuate all chlorine from the system. This is also important when changing the chlorine cylinders. In the case of an escape of chlorine gas, use a self-contained breathing apparatus. Only use sealings once, a second usage is not allowed and leads to leakage.

Before starting work on chlorine gas metering systems the cylinder valves must be closed. All chlorine leading pipes must be evacuated using the ejector.

Liquid chlorine must never enter chlorinators not being explicitly authorized for liquid chlorine.

In case that the pressure gauge at the vacuum regulator still indicates a pressure, the pressure has to be discharged using the ejector.

Before startup of the chlorination installation all connections must be carried out properly and tightened using the suitable tools. The tightness of the whole installation must be tested using ammonia vapor (ammonium hydroxide solution).

Chlorine gas is highly hygroscopic. Therefore humidity penetrates the system at every open connection of the units or pipes resulting in the formation of hydrochloric acid thus inevitably causing damage of the units. In such cases, damages of the devices are inevitable. Therefore all connections (at the vacuum units and vacuum pipes as well) must be closed at any time.

If chlorinators must be used with other gases than chlorine gas, the chemical resistance of the unit must be checked after consulting the manufacturer.

2 Before placing in operation

2.1 Compliant use

The product is especially designed for the following purpose: Metering of chlorine gas from a pressure tank to a line under vaccuum.

The operational safety of the delivered unit can only be guaranteed when it is used in conformity with its intended use. Other usage and modifications will determine the immediate cancellation of the warranty and any other manufacturer's liability.

2.2 Scope of delivery

IMPORTANT!
Please unpack the product and ordered accessories carefully in order not to miss small parts. Immediately compare the scope of delivery to the delivery note. If there are any discrepancies, contact your local distributor.

Carefully check the delivery before installation and refer to the delivery note to ensure the delivery is complete and to check for any transport damages. Contact the supplier and/or carrier regarding any questions concerning the delivery and/or transport damages.

Do not operate any defective devices.

The following belong within the scope of delivery:
- Full-vacuum chlorinator C 2214
- Wall mounting kit (optional)
- mounting set (optional)
- Operation & Maintenance Instructions

2.3 Steps to take for start-up

The following steps are recommended by the manufacturer in order to install the product successfully:
- Reading the operation manual
- Mount the device
- Start up

3 Functional principle of the vacuum regulator

3.1 Chlorine Gas

Chlorine gas is important for the disinfection of potable and swimming pool water but also represents a source of danger as far as handling, transportation and storage are concerned. Therefore the vacuum principle has been used in chlorination installations already for decades. According to this principle, the pressure of the chlorine gas is reduced to vacuum, and only then, if the vacuum is sufficient, will chlorine gas flow to the metering point. The main safety aspect is that the escape of chlorine gas is actually avoided. Even in the case of a line rupture chlorine gas cannot escape but only ambient air can be primed.

3.2 Vacuum regulator

The full-vacuum chlorinator used as pressure reducing valve is of central importance for the safety in vacuum installations. For this reason the C 2214 version has been designed in accordance with the latest findings.

The device combines several functions in one housing:

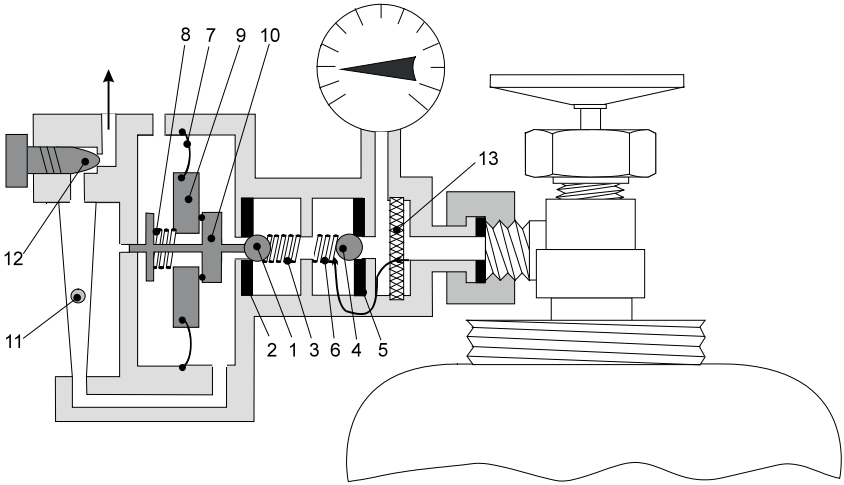

Fig. 1: Cross section C 2214 (under vacuum flow to the vacuum line)

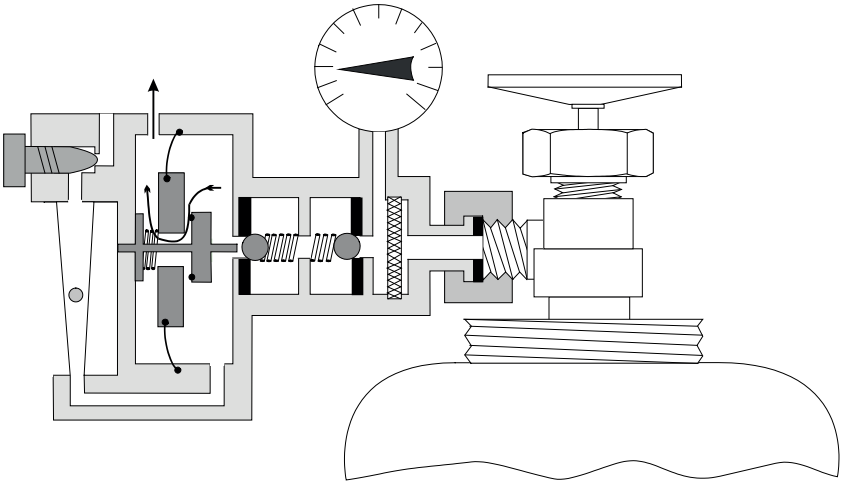

Fig. 2: Cross section C 2214 (under excessive pressure flow through the safety blowoff valve)

Vacuum regulation

In the initial position the ball ① (see fig. 3.1) rests on the valve seat ②. It is pressed onto the seat by the locking spring ③ and the chlorine cylinder pressure and closes the system. After switching on the ejector (water-jet pump), a vacuum is generated. The vacuum applies a force to the working diaphragm ⑦ of the full-vacuum chlorinator, which is directed to the right. This force is transferred to the valve ball ① by the valve rod ⑩ so that chlorine gas enters the vacuum system. If the vacuum breaks down, the valve ball falls back immediately onto the valve seat and stops the chlorine gas supply.

Flow indication and manual adjustment

An optional flow meter is mounted on the front side of the C 2214 full-vacuum chlorinator. The positon of the float element ⑪ indicates the flow directly at the scale on the gauge tube. Gauge tubes with maximum rates between 25...4000 g Cl_2/h are available. The chlorine gas flow can be easily adjusted using the needle valve ⑫ located directly at the measuring glass holder.

NOTICE!
The constant volume of chlorine gas delivered per hour from one chlorine cylinder must not exceed 1 % of the original contents. Consequently the maximum rate for e.g. a 65 kg cylinder is 650 g Cl_2/h. Otherwise there is a risk of cylinder icing. If larger amounts are required, the chlorine is supplied simultaneously from several cylinders (see installation examples).

NOTICE!
For automatic control of chlorination an electrically operated chlorine control valve (e.g. C 7700 of the manufacturer) is used. If required, it is installed anywhere in the tubing line to the ejector non-return valve.

NOTICE!
If the chlorination installation is to correspond to the German standard DIN 19606, a back-pressure regulator must be used, which avoids pressure fluctuations in the system. (Is integrated in the non-return valve of the manufacturer.)

Safety valve

If the inlet valve of the vacuum chlorinator does not close completely due to impurities, it is possible that an excessive pressure develops in the vacuum piping system which causes undesired chlorination. To avoid this, the safety valve is used. Even the lowest pressure causes the large working diaphragm ⑦ to move to the left. Thus the spring ⑧ is compressed and the diaphragm disk ⑨ lifts off from the O-ring ⑭. As a result a flow tunnel opens at the diaphragm disk, and the excessive pressure escapes into the left chamber of the vacuum chlorinator. The end of the blowdown pipe is run near the gas sensor. Thus an immediate alarm signaling is ensured.

Residual pressure preservation

While emptying the chlorine cylinder, the cylinder pressure decreases until it is too low to remove the ball ④ against the spring ⑥ from the valve seat ⑤. A residual pressure of approx. 0.1 bar remains in the cylinder.

Thus humidity cannot enter the cylinder during replacement. The humidity of the entering air would cause the chlorine cylinder to corrode internally so that the chlorine gas could be contaminated. Consequently, the residual pressure preservation helps to extend the operational life of the chlorine cylinder.

Pressure gauge

The C 2214 chlorinator is equipped with an optional pressure gauge for the indication of the cylinder pressure. The unit in question has a splash-proof measuring mechanism in a plastic housing. In order not to damage the pressure gauge by dirt particles, the chlorine gas is directed to it through an integrated filter ⑬.

The measuring range of the manometer of -1...0...15 bar was chosen in order to allow a supervision of the residual pressure maintenance.

3.3 Technical data

materials	chlorine-resistant materials such as nickel-plated brass, Hastelloy, PVC, FPM
max. capacity	up to 4000 g/h, depending on the flow meter
Setting ratio	1:20
operating vacuum	110 mbar (for 200 g/h)
Response pressure of safety valve	30 mbar
display accuracy	+/- 6% of final scale reading
weight	3000 g
pressure stage	PN16
pressure connection	union nut W1“, G5/8, G3/4, 1.030-14NGO, Yoke
dosing connector	PE-tube d 8/12, 12/16
blowoff connection	PE-tube d 8/12

Tab.: 1: Technical data C 2214

3.4 Dimensions

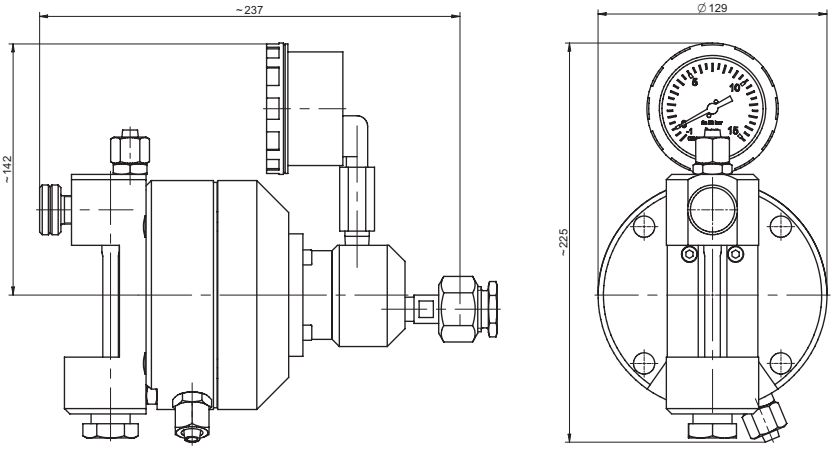

Fig. 3: Dimension C 2214

4 General

C 2214 Chlorinators are designed according to the highest safety standard DIN 19606. Several functions going beyond that standard. With these devices so-called full-vacuum installations can be set up with vacuum beginning directly at the chlorine cylinder. Even in the case of a line rupture chlorine gas cannot escape.

The full-vacuum chlorinator is of central importance for the safety in vacuum installations and provides the following functions in addition to the vacuum regulation which is the basic function:

Components and functions of C 2214	
Residual pressure preservation	against a complete evacuation of the cylinder in order to avoid corrosion caused by humidity of the entering air.
Filter	Filter for protecting the valves against dirt particles from the cylinder or from the connection area.
Cylinder pressure manometer	for display the pressure inside the chlorine tank.
Safety blowoff valve	for protecting the vacuum system against overpressure even in the case of a clogged inlet valve.
flow limiter	against icing of the cylinders as a result of an inadmissably high chlorine delivery rate.

Tab.: 2: Components and functions

The ejector are realised as stand alone products. Thus a flexible installation of the system perfectly adapted to the conditions on site is possible.

The back-pressure regulator required according to the German standard DIN 19606 is used to avoid metering faults as a result of priming pressure fluctuations of the ejector. It is integrated in the ejector non-return valve and therefore does not require additional installation space or time.

In addition to the generally needed elements, there is a number of expedient auxiliary devices. For example, distribution blocks distribute the chlorine gas flow to several metering points and back stops improve the safety of the system to a much higher level than required according to regulations. For a constant chlorine delivery even if chlorine cylinders are becoming empty, an automatic switch-over is required. Several versions are available. One version up to a rate of 10 kg/h even works without auxiliary energy. Electrically actuated control valves are installed at an arbitrary point between flow meter and ejector back-pressure valve in the vacuum line. Therefore the installation of automatically working systems is easily possible.

5 Installation

The installation of the chlorinators usually is carried out according to the drawings of the planning department. For exemplary installation diagrams see chapter 12.

Besides the possible local rules the Accident Prevention BGV D5 must also be observed. The installation must be carried out by specialist staff as already small mistakes during installation may cause faulty metering or even destroy the units.

Always use appropriate tools for the installation, for example when tightening the union nut a second wrench must be used for counter-holding in order to avoid a distortion of the units. Otherwise mechanical stress may cause damage of the components. Grease all threads slightly before assembly. Silicone grease is suitable for this. In that case the threads can be unscrewed more easily even after a long operation time.

NOTICE!
Vaseline is not suited for lubricating chlorine system components. Because of its hygroscopic effect chlorine gas extracts water out of the vaseline so that it hardens.

All units must be mounted in the position that is shown in the installation examples. Otherwise malfunction or even damage of the units caused by liquid chlorine cannot be excluded.

5.1 Chlorine delivery

5.1.1 Limited delivery quantity

At 15 °C room temperature the constant volume of chlorine gas delivered per hour from one chlorine cylinder must not exceed 1 % of the original contents. Otherwise the energy loss resulting from chlorine evaporation may cause the risk of cylinder icing. Consequently an inadmissably high pressure loss in the chlorine cylinder. Consequently, the maximum rate for e.g. a 65 kg cylinder is 650 g Cl2/h.

For higher metering capacities several chlorine cylinders must be connected as a so-called cylinder battery. The vacuum regulator C 2214 may only be used for pressure batteries.

NOTE!
Chlorine evaporation in the pressure tank withdraws energy from the surrounding air which causes condensation on all components in the room. For protecting the equipment a room heating is therefore recommended even during the summer.

5.1.2 Pressure batteries

Typical installation example:

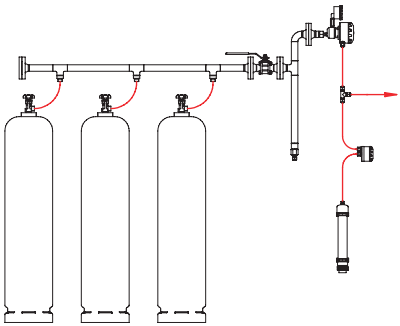

Fig. 4: Schematic diagram of a pressure battery

A collective pipe connects all cylinders forming one pressure system so that chlorine is supplied simultaneously from all cylinders. For connecting the chlorine cylinders with the collective pipe flexible copper pipes are used. Each flexible copper pipe is equipped at the end with an cylinder auxiliary valve which is closed when exchanging the cylinders so that the escape of chlorine gas is avoided.

5.1.3 Comments regarding chlorine drums

At higher metering capacities chlorine drums are often used. Depending on the ambient temperature, up to 7 kg/h chlorine gas may be supplied from a 1,000 kg drum (10°C:3kg/h, 15°C:5kg/h, 20°C:7kg/h). Chlorine drums are equipped with two connections, one for gaseous chlorine supply and one for liquid chlorine supply. For more information on which connection is suitable for which mode of delivery, contact the supplier. In some countries, valves may be situated at the top. These are designed for an extraction of liquids. In the following picture, you see an example of a German drum.

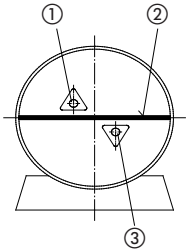

Fig. 5: ① Extraction in form of gas, ② marking on the drum, ③ extraction in form of liquid.

The position of the drum on the support must be such that the feedpipe in the barrel is vertical (marking on the drum horizontal). In this case the position of the connecting valves needs not be observed as they are staggered.

ATTENTION!
Never install the vacuum regulator directly at the chlorine drum.

After transportation the feedpipe is mostly filled with liquid chlorine which must not penetrate the metering units. Therefore a catch pot should be provided. The installation of a heating element for evaporating the liquid may also be useful.

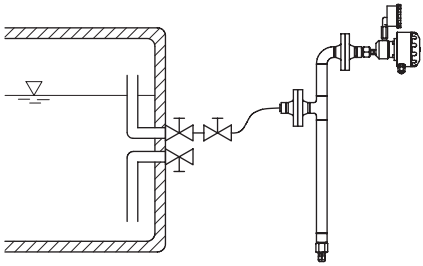

Fig. 6: Installation of the drum

5.2 Design of the piping system

For leading the chlorine gas metal and plastic pipes are used. In the overpressure range metal pipes are mandatory, in the vacuum range mainly plastic pipes are installed.

5.2.1 Overpressure pipes

Chlorine gas metering units are perfectly suitable for gaseous chlorine. However, liquid chlorine chemically attacks the unit. Therefore the penetration of liquid chlorine into the units must be avoided. Overpressure pipes must be run upwards in direction of the metering units. This also applies for flexible connection pipes. Therefore the turns of the flexible copper pipes must be positioned horizontally! condensate drops may flow back into the cylinder.

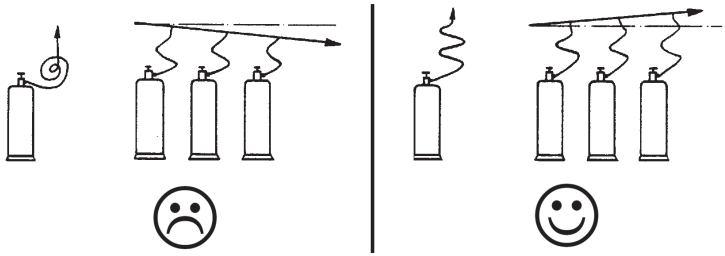

Fig. 7: Correct design of the pipes

As a result of temperature variations, chlorine gas may condense to liquid chlorine in the overpressure system. Therefore a uniform ambient temperature must be provided. A room heating is recommended. If a uniform temperature is not possible because of structural reasons, a pressure reducing valve has to be installed in order to reduce the temperature at which condensation starts. It decreases the temperature, at which condensation begins. If necessary, the chlorine has to be heated up using a chlorine heating block before entering the metering unit. Here, also a heated demister may be used.

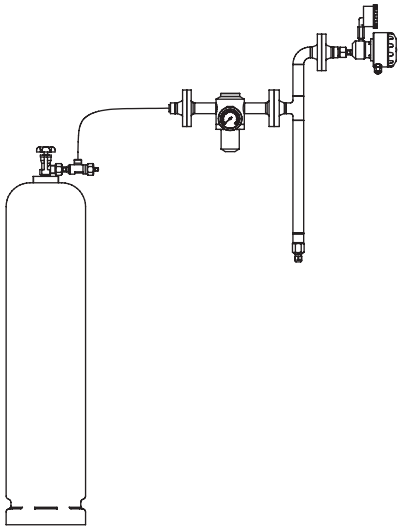

Fig. 8: Cylinder installation

As solid lines, seamless pipes are used for overpressure piping. An internal corrosion protection is not required as steel (e.g. St37-2 or St35.8) is chemically resistant against chlorine. Please make sure that the entering of humidity is avoided so that hydrochloric acid cannot be formed. For connecting flexible lines, flat gasket are used. As a result of the mechanical strain, the service life of flexible cop per pipes is limited. Accident Prevention Rule BGV D5 for example stipulates an exchange of these lines after two years at the latest.

5.2.2 Vacuum lines

As vacuum lines, inelastic PVC pipes and flexible PE tubes are used. PVC hoses are not suitable for vacuum. Fabric reinforced hoses which should be vacuum-proof are diffused by the chlorine gas and therefore not resistant. Because of the low pressure, chlorine gas condensation in the vacuum lines is almost impossible. Only below -30 it might become possible. However, temperature must never decrease to such a low level because considering the embrittlement of the materials. The ejector builds up the vacuum which is necessary for transporting the chlorine gas. Theoretically the vacuum could amount to a maximum of 1 bar, but the ejector primes only at a technically reasonable slight vacuum. Therefore the pressure loss resulting from pipe friction in the vacuum lines must not be higher than 50 mbar. The following table shows the required line cross section in relation to the length of line and the metering capacity.

Dosing rate	DN 8	DN 12	DN 15
[kg Cl_2 /h]	Hose 8/12	Hose 12/16	Pipe d 20
	[m]		
1	160	1100	4500
2	50	300	950
3	25	160	450
4	14	100	280
5	9	65	190
7,5	-	30	90
10	-	20	55

Tab.: 3: Maximum length for vacuum lines

The total value of the chlorine gas flow is decisive for the line dimensioning. If for example the line is divided into two lanes directly in front of the ejectors, the long lane must be dimensioned considering the whole chlorine gas flow.

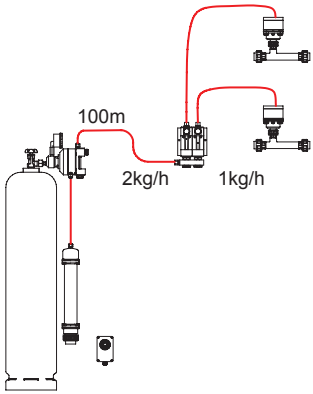

Fig. 9: Installation example vacuum line

In this example the long distance is carried out in DN12, and for the relatively short unit connections a 8/12 PE-tube is used.

5.3 Installation of units

5.3.1 Installation of vacuum regulator

The chlorine cylinders must be secured by wall holders when being stand up. Before connecting the units, the cylinders should have reached room temperature and the cylinder contents must have calmed down after transportation. When using chlorine drums make sure that the marking of the drum is in horizontal position (see information of the manufacturer). For a supply of gaseous chlorine the upper connection is used (see „Comments regarding chlorine drums“ on page 14).

The vacuum regulators are either mounted directly on the chlorine cylinder valve or on the wall holder. For cylinder mounted vacuum regulators a PVC wall connector is mounted above the chlorine cylinder. At this the vacuum regulator will be mounted during the cylinder changing and the regulator connection is protected of incomming humanity. The connection sealings made of special PTFE must not be greased with silicone grease. These sealings must also only be used once. The union nut for connecting the cylinder is tightended gently and the unit is secured against distorsion using a secowrench.

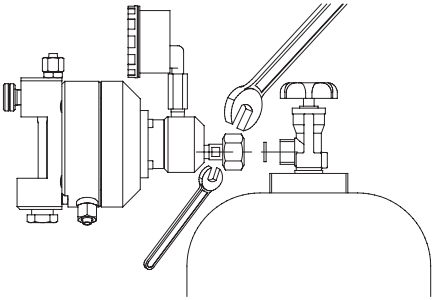

Fig. 10: Mounting of C 2214

The flow meter is in vertical position with the dosing connector at the top.

The blowoff connection of the safety valve is also carried out as tubing connection. The connected tubing should end close to the gas sensor so that in the case of malfunction an alarm can be be released immediately. The integration of an activated-carbon cartridge at the outlet of the safety valve avoids faulty alarms resulting from system-related temporary shock pressures.

It is quite reasonable to run the blowoff connection close to the gas sensor so that in the case of malfunction an alarm signal can be released immediately. The integration of an activated-carbon cartridge at the outlet of the safety blowdown valve avoids faulty alarms resulting from system-related temporary shock pressures. It is advisable to use a PVC tubing for connecting the active-carbon cartridge. As soon as a chlorine contact occurs the appearance of the tubing changes from transparent to milky thus signalling a leakage.

6 Start up

6.1 Leakage test

Before starting the chlorinators a leakage test of all plant components must be carried out. Make sure that both, plant components under overpressure and plant components under vacuum, are tested.

WARNING!
Before each leakage test, make sure to check your personal protective equipment.

6.1.1 Overpressure lines

For vacuum regulators directly installed to the cylinder, the overpressure system is limited to the cylinder connection and the inlet valve. For all other systems, the piping system to the vacuum regulator must be checked. Before each leakage test, make sure to check your personal protective equipment.

For the leakage test, open the chlorine cylinder slowly and close it again. Check all connection points with ammonium vapour (=ammonium hydroxide solution). One can either carry out slow pumping movements with the ammonia bottle in the proximity of the connection or hold a cloth soaked with ammonia close to the connection. Leaking chlorine gas and ammonia form a clear visible white dust. If the first test was successful, the cylinder may now be fully opened and checked again with ammonium vapour.

NOTICE!
Make sure that no ammonium drops on units. This leads to a strong chemical attack. A reaction is only visible with the gas! Should any drops get on the units, make sure to remove them immediately with a cloth.

Due to the high corrosivity of humid chlorine gas all leaking points rapidly aggravate in the course of time. Therefore even the smallest leakage must be removed immediately.

6.1.2 Vacuum lines

Leaking vacuum lines are not noticed during normal operation as chlorine gas does not escape but only ambient air is primed. However, at the same time humidity enters the piping system forming deposits along with the chlorine gas. This is why vacuum lines must also be leakage-tested carefully. Switch on the ejector while the cylinder valve is closed. After a short period of time the ball in the flow meter will not move anymore. If it does, a leakage test of all components including the vacuum regulator must be carried out in order to remove the leaking point. Make sure that no water penetrates the vacuum line after switching off the ejector.Water penetrates the vacuum line only if the ejector non-return valve doesn't work perfectly. For troubleshooting of the individual components, please also see paragraph 9, Maintenance.

6.2 Starting the system

For starting the plant the chlorine cylinder main valve must be opened first. Then the injection valve and the motive water supply must be opened. In the case of perfect operation conditions, a vacuum is produced in the ejector and will be transmitted via the non-return valve and the vacuum line to the vacuum controller thus opening the chlorine inlet valve. The pressurized chlorine gas is reduced to vacuum in the inlet valve. The chlorine gas flow is adjusted using the needle valve of the flow meter and can be read off at the top edge of the ball. With automatic control systems the regulating valve is first arrested to 100 % opening and the chlorine gas flow is then adjusted using the manual valve. As soon as manual samples indicate a chlorine content in the treated water the measuring system is calibrated and the plant switches over to automatic operation.

7 Operation

During normal operation of the plant the chlorine gas flow is either adjusted automatically using the regulating valve or manually using the adjusting valve of the flow meter. In the case of automatic control systems the measuring amplifier must be checked regularly by means of comparison measurements and must then be calibrated if necessary.

7.1 Cylinder exchange

If a cylinder is empty the pressure gauge will indicate a decreasing cylinder pressure. A residual pressure of approx. 0.1 – 0.2 bar remains in the cylinder. It prevents the penetration of damaging humidity into the cylinder and the inlet valve. At this residual pressure all liquid chlorine in the bottle is evaporated and there are only residual amounts of gaseous chlorine. When exchanging the cylinders, please proceed as follows:

- Close the cylinder valve (and if necessary the cylinder auxiliary valve)
- Evacuate possible residual chlorine amounts using the ejector until the ball in the flow meter lies still.
- Unscrew the union nut of the cylinder connection and remove the old flat gasket.
  (Attention: Do not damage the gasket surface!)
- Close the connection of the metering unit
  (using a PVC-plug or by mounting it to the PVC-wall holder)
- Close the cylinder connection with the screwed cap.
- Attach protection cap on the cylinder valve (if possible lubricate the thread using silicone grease)
- switch cylinder
- Attach the new cylinder to the wall holder before connecting it in order to prevent it from falling down. Make sure that the cylinder content quiets down. The cylinder must have ambient temperature before connecting a metering unit.
- The connection sealings made of special PTFE must not be greased with silicone grease. These sealings must also only be used once.
- Carry out leakage test using ammonia vapor (see „Overpressure lines“ on page 18).

NOTICE!
Because of the residual pressure of 0.1 ... 0.2 bar, a very small amount of chlorine will escape when opening the cylinder connection. Extremely sensitive sensors are able to detect even such small amounts. Therefore it is permitted to deactivate the sprinkler system during cylinder exchange, if it will be reactivated after the cylinder exchange. (e.g. by means of a door contact switch).

8 Switching off

For short operation interruptions the cylinder valves are closed and the pipes are evacuated until the ball in the flow meter indicates that there is no more flow. Then the motive water is switched off and the shut-off valves in front and behind the ejector are closed. For longer operation interruptions (e.g. in open-air pools during winter time) the following steps should be taken in order to protect the units.

- Rinse all pipes (pressure and vacuum lines) and all units approx. 5 minutes with dry air or nitrogen.
- Close the chlorine cylinder tight. The protection cap for the connection thread must be slipped on.
- Dismount at least the vacuum regulators from unheated or humid rooms and keep them dry.
- If possible dismantle all units and service them. Apply fitting grease to all threads that are not in contact with chlorine gas and lightly apply Teflon® to all other threads and elastomers. As an alternative, use silicone grease.
- Close all units and piping connections tight in order to prevent air humidity from penetrating and damaging the units.
- Exhaust all water leading lines in case of danger of frost.
- Turn all valves in middle position so that they can be released in both directions when they are re- started. If these points are observed during operation interruptions the units will restart without any problems even after longer periods out of operation.

9 Maintenance

Regular maintenance spares yourself a lot of trouble!

A maintenance contract is advisable.

If there are no rules/specifications (e.g. GUV-V D 5) or special annotations prescribing shorter maintenance intervals, all chlorinators of the manufacturer have to be maintained and tested by an authorized specialist firm at least once a year. Preferably this should happen at the beginning of a high-rate period, prior to a downtime or a restart. Please make sure that the chlorine cylinders are closed before starting work on the chlorinator. The plant must be evacuated using the ejector until the flow meter indicates zero.

The vacuum regulator is then dismantled, cleaned and parts subject to wear are exchanged. All other parts are inspected visually and exchanged if necessary. The generally required parts subject to wear are included in the maintenance kit (see „Maintenance kits“ on page 32). For cleaning the components, warm water or isopropyl alcohol are perfectly suited. Before remounting the components, make sure that they are dry. Gaskets and diaphragms should be wetted slightly using silicone grease. The seals on the inlet valve must be dry when fitted. Pressure springs can be attacked chemically by humidity. This is why they are included in the maintenance kit. Pressure springs must never be compressed completely for testing. Because this will result in overstress. Use the tool set with article no. 35280 for service.

9.1 Dismounting of the complete vacuum regulator

First the inlet valve is separated from the plastic vacuum part by unscrewing the four screws. Then it is pulled out of the PVC-part by rotating it. (More steps concerning the inlet valve see 9.1.3) The two screws at the flow meter are unscrewed and the whole flow meter is lifted off the assembly pin also by rotating it (additional information regarding measuring flow meter, see „Flow meter“ on page 23).

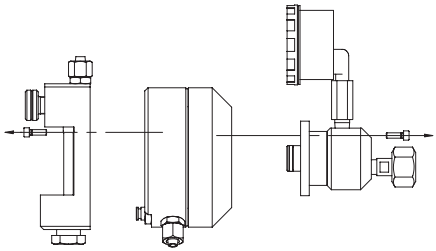

Fig. 11: Components of the full-vacuum chlorinator C2214

9.1.1 Dismounting of vacuum housing

At first the four screws of the vacuum housing (below the cover plate) are roughly 6 turns unscrewed and the PVC housing is drawn apart in axial direction. Then unscrew the four screws completely and separate the two housing halves.

NOTICE!
Important: do not upset the housing halves

For dismounting the diaphragm disk the thrust pin is pushed down and the retaining ring is removed using a long nose plier.

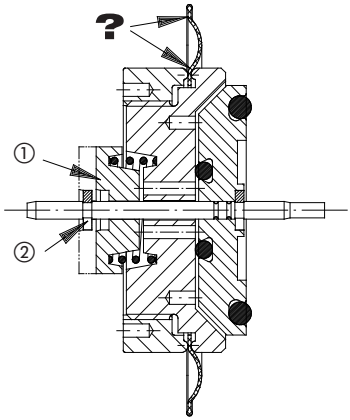

Fig. 12: Diaphragm with ① thrust pin and ② retaining ring

For dismounting the diaphragm, special clamping wrenches (2x part no. 31616) or face spanner (spigot-ø 3mm - part no. 35279 and 4mm - part no. 35278) are used. The diaphragm and the O-ring in the diaphragm disc should always be exchanged. In doing so be careful not to damage the bottom of the O-ring groove.

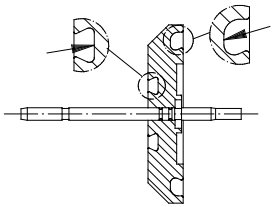

Fig. 13: O-rings at diaphragm disc

9.1.2 Mounting of vacuum housing

Before mounting the diaphragm to the diaphragm disc, lubricate the diaphragm bulges slightly with silicone grease. The threaded ring is first tightened by hand and then by not more than a quarter turn using a tool. Make sure that the diaphragm does not warp. Lubricate the O-rings with silicone grease, then smooth them down with your thumb until they lie flat in the groove. Use a new retaining ring when mounting the valve seat into the diaphragm disc. Make sure that the diaphragm is properly positioned when assembling the plastic housing. The flow channel to the flow meter must in both housing parts be at the bottom. Do not forget the O-ring between the two housing parts. After maintenance work is finished the inlet valve and the flow meter are mounted as described in para. 9.1.3 and 9.1.5 using a lubricated O-ring. For this purpose new screws have to be used. The screw thread has to be lubricated slightly with grease or silicone grease so that they can easily be removed at the next maintenance session.

9.1.3 Dismounting of inlet valve

For the disassembly of the inlet valves, remove the four screws. The springs in the inlet valve push it apart. If this should not be the case, lay down the inlet valve for some time in warm water. Make sure to remove the manometer before you do this! In order to simplify the dismounting, the ball guide and seat holder have an M5 internal thread. The felt filter can be pushed out through the cylinder connection using a thin screw driver or wire.

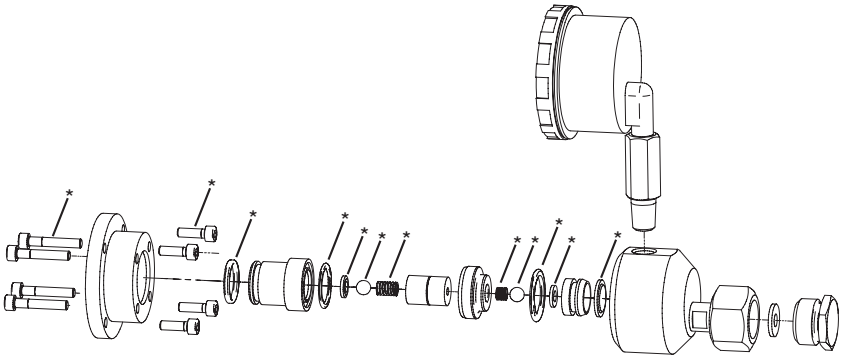

Fig. 14: Inlet valve of C 2214
*): The articles are included in the maintenance kit (see „Maintenance kits“ on page 32).

Remove the pressure gauge with a suitable open-end spanner and inspect its condition optically. Deposits in the drilling hole can be removed for example with a dry cotton bud. Do not use water!

ATTENTION!
The opening at the pressure gauge has to be sealed airtight immediately in order to prevent moisture from causing corrosion.

NOTICE!
The manometer has to be changed after 5 years.

If there are red spots on the nickel-plating of the inlet valve body, it can be used further on. Only if the spots are located on a sealing surface for the O-rings the component should be exchanged because otherwise chlorine easily could pass the sealing. In most cases damages of the nickel-plating are resulting from humidity penetrating the inlet valve if the cylinder is exchanged or stored without using a sealing plug.

9.1.4 Mounting of inlet valve

A PVC-wall holder is quite useful when mounting the inlet valve. Attach the inlet valve to the wall holder using the union nut and then put it down. Now you have both hands free for carrying out the actual mounting work. After cleaning and drying, the inlet valve is mounted in reverse order. Wrap a minimum of two layers of PTFE tape around the thread of the manometer. With the help of a bench vice, the manometer can easily be installed. All gaskets, springs, balls and filters are exchanged. All O-rings and gaskets are mounted dry. Make sure that the felt filter is seated properly. To be on the safe side, the screws should be exchanged as stainless steel embrittles after being used in chlorous atmosphere which is not visible with the naked eye. Insert the screws with assembly paste or Teflon spray. Tighten them in diagonally opposite sequence until the gap in the housing of the inlet valve is closed.

9.1.5 Flow meter

For maintenance purposes the housing and if necessary the flow meter are cleaned and the gaskets are exchanged. To dismount it the lower clamping screw is unscrewed. The O-rings are carefully pulled out of the drilling hole using an edgeless object. Do not damage the PVC! The O-ring on the setting spindle is carefully removed in the same way. The thread of the adjustment screw is cleaned from dirt and mounted when dry.

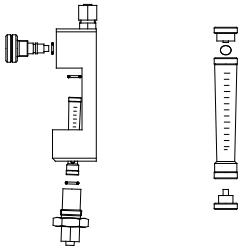

Fig. 15: Flow meter and housing

The plastic plugs of the flow meter are carefully dismounted and the float element is removed. For cleaning isopropyl alcohol is perfectly suitable.

NOTICE!
Do not mix up the float element with other flow meters and make sure that it is not damaged! When mounting the flow meter to the housing make sure that the O-rings are seated correctly.

The adjustment valves and the valve seats in the flow meter housing differ for each model / flow capacity. The adjustment valves and the flow meter housings are marked respectively.

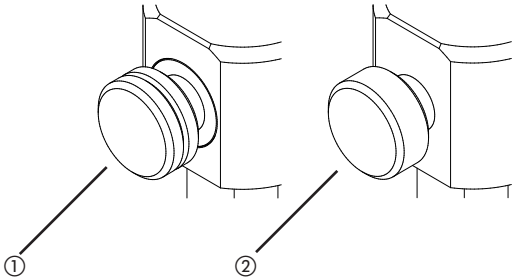

Fig. 16: Identification of the flow capacity on the adjustment valves:
①: 2 notchs at max 80 g/h, ②: 1 notch at max 500 g/h, ②: no notch at max 4 kg/h,

9.2 Check

9.2.1 Inlet valve check

The inlet valve is the main safety component of the whole chlorination plant. That's why it has to be checked particularly carefully. For the check you need dry and oil-free compressed air or nitrogen. Using an edgeless object (e.g.a biro without reservoir) press in the ball of the inlet valve and then let it off in order to make sure that it is properly seated. Connect the inlet valve using a hose to the compressed air and immerse it in water. Do not immerse the pressure gauge!

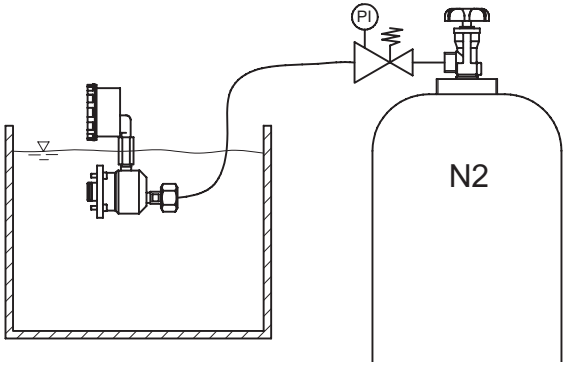

Fig. 17: Checking the inlet valve

No bubbles must rise either at high pressures (e.g. 16 bar) or at low pressures (e.g. 0.5 bar). After the check the inlet valve is dried thoroughly and then inserted into the vacuum part by turning it slightly. The O-ring has to be lubricated with silicone grease. The four screws for fixing the inlet valve are also exchanged, greased with fitting grease or sprayed with Teflon and tightened slightly.

9.2.2 Checking the complete vacuum regulator

The whole vacuum regulator must be checked on vacuum tightness. For this purpose the vacuum regulator is mounted to the wall holder or a closed chlorine cylinder and the ejector is connected using a metering tubing. One end of a transparent tubing is loosely put on the blow-off connection and the other end is immersed in water.

After switching on the ejector, the water level in the tubing rises only a few centimeters and then remains constant. The ball in the flow meter rises, then drops slowly and indicates zero after a short time. If the flow meter does not indicate zero, there must be an untight spot where air finds its way into the system.

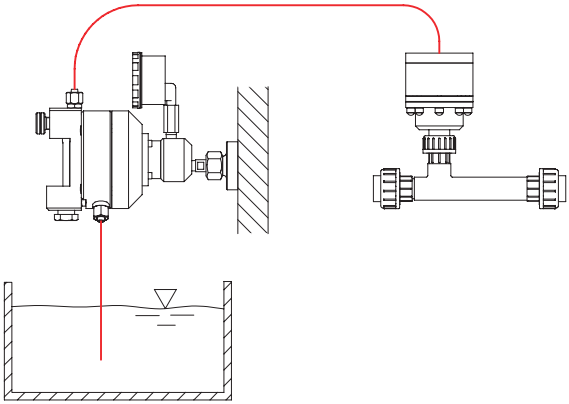

Fig. 18: Checking the complete vacuum regulator

9.2.3 Checking the safety blowoff valve

For this purpose the vacuum regulator is mounted to the wall holder or to a closed chlorine cylinder. At the dosing tubing apply an excess pressure of 0.03 ... 0.1 bar using dry air. One end of a transparent tubing is loosely put on the blow-off connection and the other end is immersed in water. After achieving a sufficient excess pressure, bubbles rise in the water.

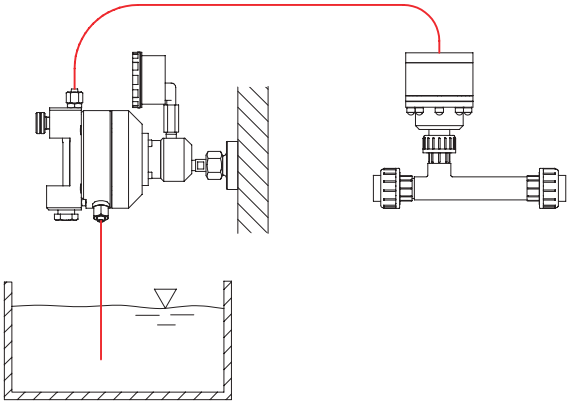

Fig. 19: Checking the safety blowoff valve

9.2.4 Activated-carbon cartridge

The filling of the activated-carbon cartridge has to be exchanged either if it is loaded with chlorine or if it gets lumpy due to humidity.

CAUTION!

There is a strong chlorine smelling if activated carbon is loaded with chlorine gas. Therefore you should absolutely never exchange the filling in closed rooms or in the proximity of aspirating mouths of ventilating systems. For chlorine neutralization, sodium thiosulfate solution is perfectly suitable.

10 Troubleshooting

Type of fault	Possible cause	Recommended action
No flow meter indication or indicated value too low.	Chlorine cylinder empty.	Connect new cylinder.
	Cylinder valve or auxiliary valve not open.	Open valves.
	Vacuum system is not completely tight so that ambient air is primed.	Open valves step by step in order to find and remove untight point.
	Changeover unit did not switch to full cylinder.	Actuate changeover unit by hand and check its function.
	Filter of inlet valve clogged.	Replace filter element.
	Floating element in flow meter clogged.	Dismantle and clean flow meter.
	Dirt screen in motive water line clogged.	Clean and exchange filter.
	Solution injection fitting clogged.	Clean solution injection fitting or open the stop valve.
	Ejector performance too low.	Exchange ejector, reduce back pressure or increase motive water pressure.
	Ejector clogged.	Clean ejector.
	Carbonate precipitations in ejector.	Remove precipitations (e.g.10% hydrochloric acid approx. 5 min.). If possible, set higher chlorine concentration (1..2 g/l) and reduce, motive water pressure, if necessary.
	High back pressure at ejector resulting from incorrect running of solution line.	Optimize solution line, avoid sharp bends and cross-sectional contractions (possibly caused by excessive cement.)
	Vacuum lines too small.	Use larger vacuum lines or increase ejector priming output.
Chlorine smell or chlorine alarm	Leaking overpressure system.	Close chlorine cylinder immediately (using .protecting mask) and evacuate lines using ejector. Look for leaking points as described in section LEAKAGE TEST.
	Safety valve bleeds off in the case of overpressure resulting from clogged inlet valve.	Maintain inlet and safety valve as described in section MAINTENANCE and exchange loaded activated carbon if necessary. If there are heavy dirt deposits in inlet valve, check chlorine gas purity and provide for room heating (approx. 20°C).
White deposits in flow meter.	Vacuum system is leaky and air humidity condenses forming white fog.	Look for untight spots and remove them. Otherwise incrustations will be formed affecting valve functions.
Water in vacuum system.	Ejector nonreturn valve untight because defective or clogged.	Maintain ejector nonreturn valve, install backstop.
	End of blowoff line under water and safety valve untight.	Maintain safety valve and pull out end of blowoff line of the water.

Type of fault	Possible cause	Recommended action
Cylinder iced.	Delivery rate too high.	Max. 1% of cylinder filling per hour is permitted. Install flow limiter, increase room temperature.
Cylinders are not emptied uniformly.	Conditions for simultaneous delivery not provided.	See section INSTALLATION.
	Chlorination plant designed for much higher metering capacities than actually required. As a result the delivery rate per cylinder is reduced.	Connect only as many cylinders as really needed. Fix remaining vacuum regulators to PVC wall holder using flat gasket.
	Incorrect adjustment of simultaneous delivery.	Readjust units as described in section MAINTENANCE.

11 Accessories

Article	Part.-No.
PE tubing d 8/12	97124
PVC tubing d 8/12 (only as blow-off line)	97561
PE d tubing 12/16	97176
ammonia bottle k (50 ml)	13514
set accessories (5 m PE tubing, mounting brackets, ammonia)	22412
PVC wall holder W1“ incl. mounting material	28380
PVC wall holder G 5/8 incl. mounting material	29752
PVC wall holder G 3/4 incl. mounting material	28360
PVC wall holder 1.030“-14NGO incl. mounting material	38320
safety shutoff valve d 8/12	20401009
safety shutoff valve d 12/16	20401010
activated-carbon cartridge incl. mounting material	12032301
Activated-carbon cartridge refill	35057
back stop, tubing d 8/12	20435060
back stop, tubing d 12/16	20435061
back stop, PVC d 16i	20435118
set open end-spanners for exchanging cylinders (SW 32 + 13)	35559
tool kit for maintenance of the vacuum regulator	35280

Tab.: 4: Accessories

Wall holder

A PVC wall holder is used to receive the chlorinator while cylinder is exchanged and closes the pressure connection at the same time. Thus the entry of humid air is avoided effectively also during replacement of the cylinder.

Activated-carbon cartridge

In almost any installation incl. vacuum systems, temporary shock pressures may occur, which cause the extremely sensitive safety blowdown valve to respond briefly so that gas warning device is activated. In order

to make sure that only a "real" dangerous situation is indicated by the gas warning device, an activated-carbon cartridge is integrated in the blowdown pipe, thus avoiding faulty alarms. Only if larger amounts of chlorine escape will an alarm be reported.

Back stop / back-pressure valve

It is an experience that even the best ejector non-return valve may become untight sometime because of impurities. Therefore the installation of an additional back stop is prescribed by law in some countries. Its function is to prevent water from entering the chlorinators even in the case of a failure. So that these devices are not damaged.

The backstop has a second safety function. It requires a small differential pressure to open. The value of this differential pressure has been chosen so that it slightly exceeds the minimum repsonse pressure of the safety valve. Even in the case of creeping chlorine leakage at the full-vacuum chlorinator, the safety blowdown valve responds exactly thus avoiding the development of excessive pressure in the vacuum system.

Safety Shutoff Valve

The safety shutoff valve is required according to DIN 19606, if the injector is situated outside of the chlorine gas area. Often the use of a valve is required which opens only, if the ejector is under vacuum and which is completely closed during system standstill. The safety shutoff valve ensures this function. It is installed instead of the back stop.

12 Installation examples

12.1 Individual installation of full-vacuum chlorinators directly on the chlorine cylinder

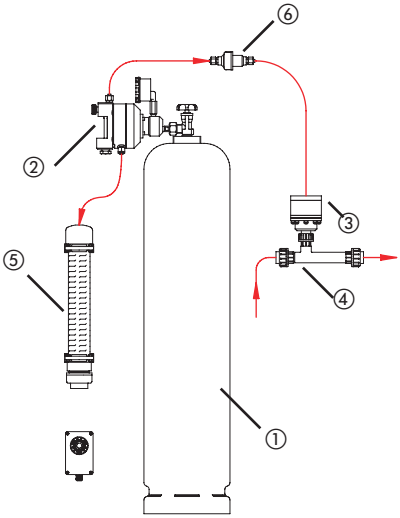

Fig. 20: ① chlorine cylinder, ② vacuum regulator C 2214, ③ ejector non-return valve, ④ ejector ⑤ activated-carbon cartridge
and ⑥ back stop

12.2 Manifold with one vacuum regulator for each cylinder line

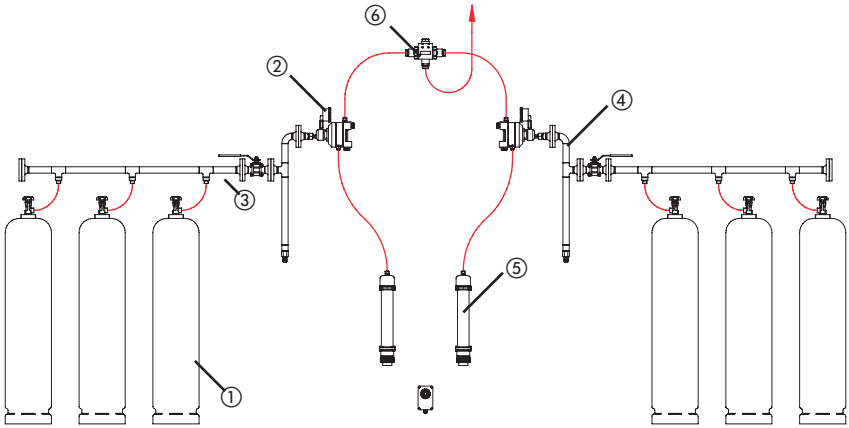

Fig. 21: ① chlorine cylinder, ② vacuum regulator C 2214, ③ manifold , ④ catch pot,
⑤ activated-carbon cartridge aund ⑥ Changeover unit CVS

12.3 Schematic diagram of a complete chlorination installation

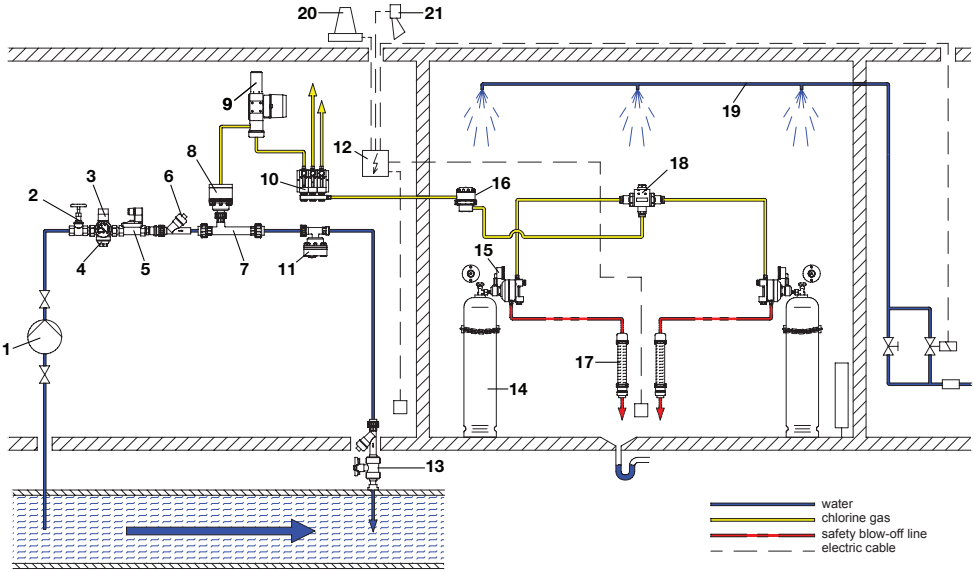

Fig. 22: Schematic diagram of a complete chlorination installation

1 Booster pump
2 Shutoff valve
3 Pressure reducing valve with pressure gauge
4 Dirt trap
5 Solenoid valve
6 vacuum changeover switch
7 Ejector
8 Ejector non-return valve
9 Control valve
10 Flow meter rather distribution block
11 Vacuum breaker
12 Chlorine gas detector
13 Chlorine solution injector
14 Chlorine cylinder
15 Full-vacuum chlorinator
16 Safety shutoff valve
17 Activated-carbon cartridge
18 Chlorine changeover equipment
19 Sprinkler installation
20 Signal lamp
21 Alarm horn

13 Maintenance kits

	Inhalt	Artikel-Nr.
Maintenance kit vacuum regulator C 2214 without intake valve	1 diaphragm, 10 O-rings, 6 screws, 1 Sicherungsring	35040
Maintenance kit inlet valve	1 filter, 4 O-rings, 2 valve seats, 2 balls, 14 screws, 2 springs, 6 washers	Standard: 38619 Increased residual pressure: 38924
Cylinder connector gasket	1'' (BSW 1'' gem. DIN 477)	81834
	G 5/8 (gem. BS 341)	81832
	G 3/4 (gem. AS2473)	81833
	1.030-14NGO (gem. CGA V-1 / 660)	81836
	Yoke (gem. CGA V-1 / 820)	81837
Manometer	Standard	24087596
	1x MAX close contact	24087597
	1x MIN close contact	24087598
Maintenance kit for back stop	2 O-rings, 1 ball, 1 spring	35062
Spare filling for activated-carbon filter	activated carbon	35057

Tab.: 5: Servicing kits

14 Unit revision

This operation manual applies to following units:

Unit	Revision
C 2214	04.2010

It contains all the technical information required for installation, start-up and maintenance. Should you have any questions or require further informations regarding these operating instructions, please contact the manufacturer or its official national representative.

15 Declaration of harmlessness

Declaration of Harmlessness

Please fill out a separate form for each appliance!

We forward the following device for repairs:

Device and device type: .....

Part-no.: .....

Order No.: ..... Date of delivery:.....

Reason for repair: .....

.....

Dosing medium

Description: ..... Irritating: ☐ Yes ☐ No

Properties: ..... Ätzend: ☐ Yes ☐ No

We hereby certify, that the product has been cleaned thoroughly inside and outside before returning, that it is free from hazardous material (i.e. chemical, biological, toxic, flammable, and radioactive material) and that the lubricant has been drained.

If the manufacturer finds it necessary to carry out further cleaning work, we accept the charge will be made to us.

We assure that the aforementioned information is correct and complete and that the unit is dispatched according to the legal requirements.

Company / address: ..... Phone: .....

..... Fax:.....

..... Email: .....

Customer No.:.....

Contact person: .....

....

Date Signature

16 EC Declaration of Incorporation

(DE) Einbauerklärung im Sinne der EG-Richtlinie 2006/42/EG über Maschinen (Anhang II B)
Hiermit erklären wir, dass die nachstehend beschriebene unvollständige Maschine alle grundlegenden Anforderungen der Maschinenrichtlinie 2006/42/EG erfüllt, soweit es im Rahmen des Lieferumfangs möglich ist. Ferner erklären wir, dass die speziellen technischen Unterlagen gemäß Anhang VII Teil B dieser Richtlinie erstellt wurden. Wir verpflichten uns, den Marktaufsichtsbehörden auf begründetes Verlangen die speziellen Unterlagen zu der unvollständigen Maschine über unsere Dokumentationsabteilung zu übermitteln. Die unvollständige Maschine darf erst dann in Betrieb genommen werden, wenn ggf. festgestellt wurde, dass die Maschine oder Anlage, in welche die unvollständige Maschine eingebaut werden soll, den Bestimmungen der Richtlinie 2006/42/EG über Maschinen entspricht und die EG-Konformitätserklärung gemäß Anhang II A ausgestellt ist.

(EN) Declaration of Incorporation according to EC directive 2006/42/EC on machinery (Annex II B)
Herewith we declare, that the partly completed machinery described below is complying with all essential requirements of the Machinery Directive2006/42/EC, as far as the scope of delivery allows. Additional we declare that the relevant technical documentation is compiled in accordance with part B of Annex VII. We commit to transmit, in response to a reasoned request by the market surveillance authorities, relevant documents on the partly completed machinery by our documentation department.The partly completed machinery must not be put into service until the final machinery into which it is to be incorporated has been declared in conformity with the provisions of Directive 2006/42/EC on Machinery, where appropriate, and until the EC Declaration of Conformity according to Annex II A is issued.

(FR) Notice de montage dans le cadre de la directive européenne 2006/42/CE relative aux machines (annexe II B)
Nous expliquons ici que la machine incomplète décrite ci-après répond à toutes les exigences fondamentales de la directive relative aux machines 2006/42/CE, pour autant que cela soit possible dans le cadre du volume de livraison. Plus loin nous expliquons que les documents techniques spéciaux sont établis conformément à l'annexe VII partie B de cette directive. Pour ce qui est de notre service de documentation, nous nous engageons à communiquer aux autorités de surveillance du marché les explications fondées des documents spéciaux pour la machine incomplète. La machine incomplète doit d'abord être mise en service, quand il est constaté que la machine ou l'installation dans laquelle la machine incomplète doit être montée répond aux dispositions de la directive 2006/42/CE relative aux machines, et que la notice de conformité européenne est présentée conformément à l'annexe II A.

(ES) Declaración de incorporación según la Directiva 2006/42/CE sobre máquinas (Anexo II B)
Por la presente declaramos que la siguiente cuasi máquina cumple con todas las disposiciones pertinentes de la Directiva 2006/42/CE de máquinas, siempre y cuando lo permita el volumen de suministro. También declaramos que la documentación técnica descrita en el anexo VII parte B se ha elaborado conforme a la presente Directiva. Nos comprometemos a enviar los documentos de la cuasi máquina a las autoridades de vigilancia del mercado a través de nuestro departamento de documentación en respuesta a una previa solicitud motivada. La cuasi máquina no puede ponerse en servicio sin antes verificar que la máquina o el sistema en el que se instale la cuasi máquina, cumpla con las disposiciones de la Directiva 2006/42/CE de máquinas y con la declaración CE de conformidad según el anexo II A.

(PT) Declaração de Construção de acordo com a Directiva-CE 2006/42/CE de máquinas (Anexo II B)
Esclarecemos por meio deste que a máquina incompleta descrita a seguir segue os requerimentos da directiva de máquinas 2006/42/CE, contanto que sua utilização seja mantida dentro do escopo original. Esclarecemos ainda que a documentação técnica especial segue o disposto no Anexo VII Parte B de tal directiva. Comprometemo-nos a a cumprir com as exigências das autoridades de fiscalização que forem feitas a nosso departamento de documentação que estejam relacionadas a qualquer documentação da máquina incompleta. A máquina poderá ser colocada em operação, se necessário for, desde que seja verificado que o sistema ou a máquina na qual a máquina incompleta será instalada foi montada, em conformidade com a directiva 2006/42/CE de máquinas e com à declaração de conformidade 2006/42/CE.

Bezeichnung des Gerätes:	**Chlor-Vakuumregler Geräteserie**	Descripción de la mercancía:	**Dosificador de cloro gaseoso**
Description of the unit:	**Chlorinator product series**	Designação do aparelho:	
Désignation du matériel:	**Régulateur de chlore à dépression**		
Typ / Type	**C2213, C2214**		

Sicherheitsanforderungen:
Safety requirements:

GUV-V D5	**Unfall Verhütungsvorschrift „Chlorung und Wasser“**	**Safety rule „Chlorination of water“**

Technische Regelwerke:
Technical set of rules:

DIN 19606:2010	**Chlorgasdosieranlagen**	**Chlorine gas dosing systems**

i. V. Dipl. Ing. (FH) Gerd-Richard Sacht
Leiter Abteilung Gasdosierung
Head of Gas Dosing Department
Lutz-Jesco, Wedemark, 20.06.2012

Dokumentationsbevollmächtigter:
Authorized person for documentation:
Gerd-Richard Sacht
Adresse: siehe Adresse des Herstellers
Address: see manufacturer's address

Lutz-Jesco GmbH
Am Bostelberge 19
30900 Wedemark
Germany

17 Warranty Application

Warranty Application

Please copy and send it back with the unit!

If the device breaks down within the period of warranty, please return it in a cleaned condition with the complete warranty application, filled out.

Sender

Company: ..... Phone.: ..... Date: .....

Address: .....

Contact person: .....

Manufacturer order no.: ..... Date of delivery: .....

Device type: ..... Serial number: .....

Nominal delivery capacity / nominal pressure: .....

Description of fault: .....

.....

.....

.....

.....

.....

.....

Service conditions of the device

Point of use / system designation: .....

.....

.....

Accessories used (suction line etc.): .....

.....

.....

.....

Commissioning (date): .....

Duty period (approx. operating hours): .....

Please describe the specific installation and enclose a simple drawing of the chemical feed system, showing materials of construction, diameters, lengths and heights of suction and discharge lines.