Reliable technology for every need

Chlorinator C 2701

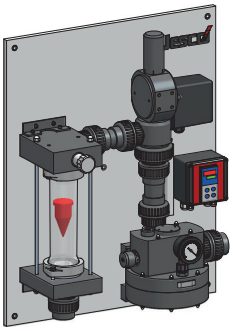

Use

The most common use for vacuum chlorinators is disinfecting water in waterworks, cooling towers or in treatment plants for water processing. All these uses require automated chlorinators

The C 2701 equipment series combines classic chlorinators foe manual use with automated elements. Remote control is via standard signals.

C 2701 is a DIN 19606-compliant vacuum chlorinator which is used for dosing dangerous gases such as chlorine, sulphur dioxide or ammonia. Gas escapes are impossible as pressure in all parts of the chlorinator are lower than atmospheric pressure.

Functions

- Vacuum technology compliant with DIN 19606
- Glass flow meter
- Highly chemical-resistant materials
- Automatic control valve (optional)
- Signal converter (optional)
- Back-pressure regulator
- Vacuum meter

Modular system with options

The dosage is set manually in devices in the standard range and displayed on the float-type flow meter made of high-resistance glass. On devices with automatic control valve the dosage can be set remotely using standard signals. The control valve has a nozzle system which has been specially developed for use with chlorine – highly chemical-resistant and insensitive to soiling.

The C 2701 can be fitted with a signal converter as an option, which allows the chlorinator to be matched very well to the given application. Possible reasons for use include:

- The chlorinator selected was too large.
- The process requires variable dosage concentrations, depending on season, for instance.

The series back-pressure regulator controls the pressure conditions in the device and ensures exact dosing. It is fitted with a vacuum meter – with the option of a threshold value switch.

C 2701/SL

All function groups are mounted in a free-standing cabinet. The operating and display elements are on the front. All assembly components are easily accessible from the rear for maintenance tasks.

C 2701/WL

The function groups are mounted on a plastic panel. Operation and service is performed from the front.

Technical data

Chlorinator C 2701			
dosage range		kg/h Cl_2	40 / 60 / 120 / 200
Operating vacuum		mbar	-100
Required injector vacuum		mbar	-250
nominal value of air valve		mbar	-500
adjustable flow range		%	0 – 100
Ambient temperature		°C	0 – 40 (no direct sunlight)
Flow meter	Length / scale ratio	mm	300 / 1:20
	Accuracy		± 2 % of final scale reading
Vacuum meter	Measuring range	bar	-1 – 0, ± 2.5 %
	Size	mm	Ø63
Material in contact with the media			PVC, PVDF, Glass, Hastelloy, FPM
Weight	Wall device	kg	32 approx.
	Free standing cabinet		58 approx.

Consult separate data sheets for the technical data relating to the automatic control valve and signal converter.

Installation example

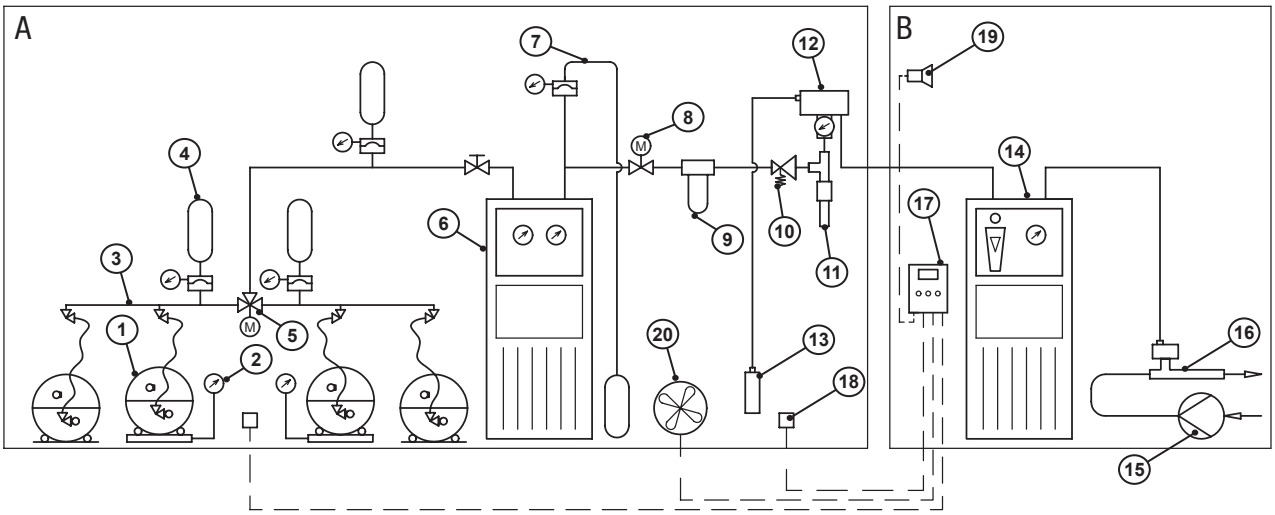

Item	Description
A	Room for the chlorine supply
B	Dosing device room
1	Chlorine barrel
2	Chlorine barrel scale
3	Pressurized manifold
4	Expansion system for piping
5	Changeover switch
6	Chlorine evaporator
7	Expansion system for chlorine evaporator
8	Automatic chlorine ball valve
9	Chlorine gas filter

Item	Description
10	Pressure reducing valve
11	Moisture eliminator with heating collar
12	Vacuum regulator
13	Activated carbon cartridge
14	Dosing device
15	Motive water pump
16	Injector with non-return valve
17	Gas warning device
18	Gas sensor
19	Horn
20	Entrance port of the chlorine eliminator

Dimensions

C 2701/WL

All dimensions in mm

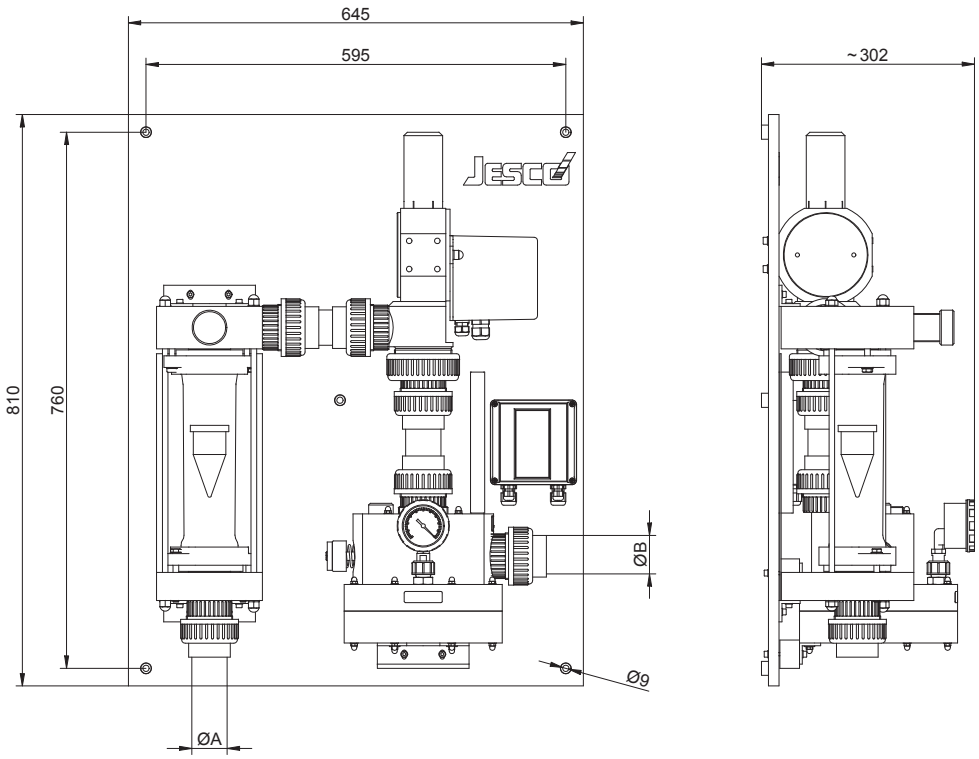

C 2701/SL

All dimensions in mm

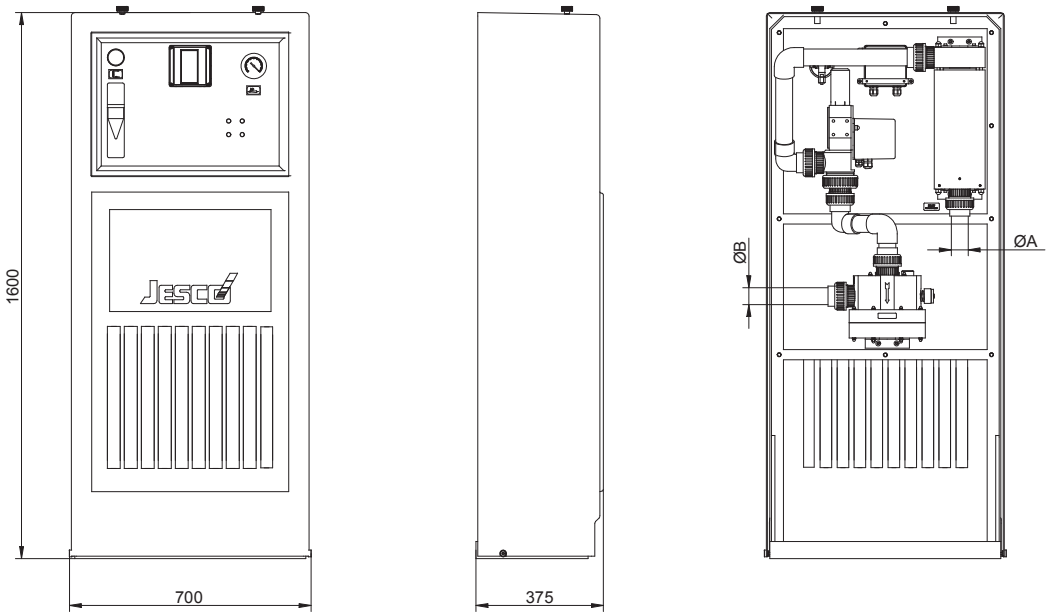

Power output	Input ØA and Output ØB
up to 60 kg/h	PVC screw connection DN32/Ø40
up to 200 kg/h	PVC screw connection DN40/Ø50

Product range

Lutz Pumpen GmbH
Post Office Box 1462
D-97864 Wertheim
www.lutz-pumpen.de

Barrel and container pumps

Flow meters

Double diaphragm pumps

Centrifugal pumps

Product range

Lutz-Jesco GmbH
Am Bostelberge 19
D-30900 Wedemark
www.lutz-jesco.com

Dosing pumps

Chlorinators

Chemical centrifugal pumps

TECHNOPOOL

Products for the disinfection of swimming pool water based on salt water electrolysis and domestic water technology

Measuring and control equipment

Disinfection

System and process technology

Available on the App Store

The Lutz-Jesco App for iPads and iPone is available from the iTunes App Store. Further information on this can be found at www.lutz-jesco.com

Head Office
Lutz-Jesco GmbH
Am Bostelberge 19
30900 Wedemark
Germany

Tel.: +49 5130 5802-0
Fax: +49 5130 580268

E-mail: info@lutz-jesco.com
Internet: www.lutz-jesco.com

Hungary
Lutz-Jesco Üzletág
Vasvári P. u. 9.
9024 Györ
Hungary

Tel.: +36 96 523046
Fax: +36 96 523047

E-mail: info@lutz-jesco.hu
Website: www.lutz-jesco.hu

Austria
Lutz-Jesco GmbH
Aredstraße 7/2
2544 Leobersdorf
Austria

Tel.: +43 2256 62180
Fax: +43 2256 6218062

E-mail: info@lutz-jesco.at
Website: www.lutz-jesco.at

Netherlands
Lutz-Jesco Nederland B.V.
Nijverheidstraat 14 C
2984 AH Ridderkerk
Netherlands

Tel.: +31 180 499460
Fax: +31 180 497516

E-mail: info@lutz-jesco.nl
Website: www.lutz-jesco.nl

Great Britiain
Lutz-Jesco (GB) Ltd.
Gateway Estate
West Midlands Freeport
Birmingham B26 3QD
Great Britain

Tel.: +44 121 782 2662
Fax: +44 121 782 2680

E-mail: info@lutz-jesco.co.uk
Website: www.lutz-jesco.co.uk

USA
Lutz-JESCO America Corp.
55 Bermar Park
Rochester, N.Y. 14624
USA

Tel.: +1 585 426-0990
Fax: +1 585 426-4025

E-mail: mail@jescoamerica.com
Website: www.lutzjescoamerica.com

East Asia
Lutz-Jesco East Asia Sdn Bhd
6 Jalan Saudagar U1/16
Hicom Glenmarie Industrial Park
40150 Shah Alam/ Selangor
Malaysia

Tel.: +603 55692322
Fax: +603 55691322

E-mail: info@lutz-jescoasia.com
Website: www.lutz-jescoasia.com

Middle East
Lutz-Jesco Middle East FZE
P.O. Box 9614
SAIF-Free Zone Center
Sharjah
UAE

Tel.: +971 6 5572205
Fax: +971 6 5572230

E-mail: info@jescome.com
Website: www.jescome.com

PI-21301-02-V03 | Copyright 2019 by Lutz-Jesco GmbH
Subject to technical changes