FEDOS E/DX

Piston Dosing Pump

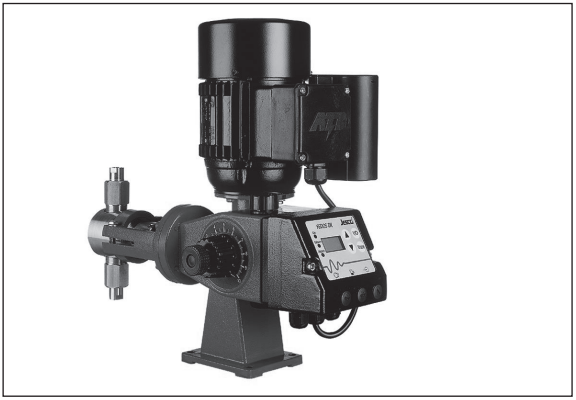

EN 02

Operating Manual

Read this operating manual before using the equipment.
To be retained for future reference.

Dosing | *Liquids*
Conveying | *Gases*
Control | *Systems*

Contents

1. General and Safety Instructions **3**
2. General **7**
2.1 Proper intended use 7
2.2 Structure of the dosing pump 7
3. Function **8**
4. Dimensioned drawings **9**
5. Technical data **10**
5.1 Electric motor data 12
5.2 Technical data, ATE servomotor FEDOS E (optional) 13
6. Delivery characteristic curves **14**
7. Installation **15**
7.1 General information 15
7.2 Installation location 16
7.3 Electrical connection of the dosing pump 16
7.4 Wiring diagrams for ATE servomotor for stroke length adjustment 18
7.5 Level monitoring 19
7.6 Pressure control and safety valves 19
7.7 Injection nozzle installation 20
7.8 Installation example 20
8. Operation **21**
8.1 Stroke length adjustment 21
8.2 FEDOS DX operating elements 21
8.3 Switching on/off 21
8.4 Operating mode selection 21
8.5 Alarm 22
8.6 Other settings 23
8.7 Factory setting 23
8.8 Connections and cable assignments 23
9. Start-up **25**
9.1 Start up of FEDOS E with ATE servomotor 25
10. Shutdown **26**
10.1 Disposal of old equipment 26
Device revision **26**
11. Maintenance **27**
11.1 Lubrication 27
11.2 Maintenance of the bearings 27
11.3 Maintenance of the ATE servomotor (optional) 27
11.4 Replacing the piston 27
11.5 Valves 29
12. Explosion-proof dosing pumps **32**
12.1 General 32
12.2 Special conditions 32
13. Troubleshooting **33**
14. Spare parts **34**
15. External vent (optional) **40**
Index **41**
Declaration of no objection **42**
Warranty claim **43**
CE declaration of conformity **44**

1. General and Safety Instructions

1.1 General

This operating manual contains basic instructions to be followed during installation, operation and maintenance. It is therefore essential for the assembler and the relevant technical personnel/operating company to read this operating manual prior to installation and start-up. It must remain accessible at the place of installation of the system for reference at all times.

Besides the general safety instructions in this "Safety" section, the special safety instructions in the other sections are also to be followed.

1.2 Identification of safety instructions in the operating manual

Failure to follow the safety instructions in this operating manual may result in personal injury or damage to the environment and the system. Safety instructions are identified by the following symbols:

DANGER!
Indicates an immediate danger.
Failure to follow this instruction will lead to death or extremely serious injuries.

WARNING!
Indicates a potentially hazardous situation. Failure to follow this instruction may lead to death or severe injury.

CAUTION!
Indicates a potentially hazardous situation. Failure to follow this instruction may lead to minor injury or damage to property.

ATTENTION! or **NOTICE!**
Failure to follow these safety instructions may endanger the machine and its functions.

IMPORTANT!
This refers to additional information to facilitate operation and ensure the smooth running of the equipment.

Information attached directly to the dosing pump, such as
- cable markings
- markings for fluid connections

must be followed without fail and must remain fully legible at all times.

1.3 Personnel qualifications and training

The personnel employed for operation, maintenance, inspection, and installation must be suitably qualified for this work. The responsibilities, areas of competence and personnel supervision must be clearly defined by the operating company. Personnel who do not have the required know-how must be duly trained and instructed. If necessary, this can also be done by the manufacturer/supplier on behalf of the operating company. In addition, the operating company must ensure that the personnel are fully familiar with, and have understood the contents of this operating manual.

1.4 Important safety instructions

When installing and using this electrical device, basic safety precautions should always be followed, including the following:

ATTENTION!
Read and follow all instructions! Keep this operating manual for future reference!

WARNING!
To reduce the risk of injury, do not permit children to use this product unless they are closely supervised at all times.

WARNING!
Risk of electric shock. Connect the device only to a socket outlet with earthing contact protected by a ground fault circuit interrupter (GFCI). Consult a qualified electrician if you are uncertain whether the socket is protected by a GFCI.
Do not bury the cable. Secure cable to avoid damage by lawn mowers, hedge trimmers and other equipment.

WARNING!
To reduce the risk of electric shock, replace the cable immediately if damaged.

WARNING!
To reduce the risk of electric shock, do not use extension lead to connect unit to electric supply; use an appropriately located socket outlet.

1.5 Hazards due to failure to follow safety instructions

Failure to follow the safety instructions may endanger not only persons, but also the environment and the device. Failure to follow the safety instructions may invalidate any damage claims.

The following hazards in particular may result:
- Failure of major equipment functions
- Failure of required maintenance and repair methods.
- Danger to persons due to electrical, mechanical and chemical effects.
- Danger to the environment due to leakage of hazardous substances.

1.6 Safety awareness at work

The safety instructions contained in this operating manual must be observed. The operating company is responsible for ensuring compliance with local safety regulations. Faults that may affect safety must be repaired immediately.

1.7 Safety instructions for the operating company/operator

Leakages of hazardous substances (e.g. aggressive, poisonous) must be disposed of in such a way that they do not pose a risk to persons and the environment. Legal requirements must be observed.

Risks from electric current must be excluded (for further details, refer to the VDE[1)] regulations and regulations of the local public utilities).
[1)] German Association for Electrical, Electronic & Information Technologies

Separate regulations must be observed if the FEDOS E is operated in potentially explosive atmospheres. The operating company must determine the explosion hazard (area classification) and select the appropriate equipment. Further information can be found in paragraph 7.1 (Installation), paragraph 7.4 (Electrical connection) and section 12 (Explosion-proof dosing pumps).

1.8 Safety instructions for inspection, maintenance and installation work

The operating company must ensure that all maintenance, inspection and installation work is carried out by authorised and duly qualified personnel, who have read and understood this operating manual.

Any work on the machine must only be carried out after it has been brought to a complete stop. Always follow the procedure specified in the operating manual for shutting down the dosing pump/system.

Dosing pumps or systems which convey hazardous media must be decontaminated.

All safety and protective equipment must be reattached and activated immediately after the work has been completed.

CAUTION!
Particular caution is required during repair work with the operation of the FEDOS E in potentially explosive atmospheres. Due to the risk of sparking, care must be taken to prevent metal parts or tools knocking against one another. When repairing, it is better to move the dosing pump out of the area with a potentially explosive atmosphere.

Those points specified in chapter 7.2 "Installation location" and section 9. "Start-up" must be observed before setting into operation.

1.9 Unauthorised modification and production of spare parts

The device may only be modified or converted in consultation with the manufacturer. Use only the manufacturer's spare parts and accessories. Otherwise the warranty is invalidated.

1.10 Inadmissible operating practices

Any methods of operation which contradict chapter 2 "Proper intended use" are inadmissible and will result in the expiry of all liability claims.

1.11 Dosing of chemicals

CAUTION!
When working on dosing systems, the local accident prevention regulations must be observed and the specified personal protective equipment must be worn. The following standard protective clothing is recommended, depending on the hazardousness of the metered medium:

Protective clothing

Protective gloves

Protective goggles

It is recommended that all persons responsible for the installation and maintenance of piping systems, hoses and accessories wear this protective clothing.

Before working on the dosing pump and system, disconnect it from the mains power supply and prevent it from being switched on.

CAUTION!
Any chemical still present in the dosing head may spray out when the voltage supply is reconnected. This may lead to chemical or other burns to the face and hands. Dosing lines must always be connected before switching on again.

The chemical resistance of the construction materials in the pump must be verified before dosing aggressive media!

The pump dosing head and the system connections and lines may be under pressure. Working on the dosing system requires special safety precautions and is allowed only for suitably trained personnel:

CAUTION!
Chemical may spray out. This may lead to chemical or other burns. Always release the pressure before starting work on the dosing pump.

Before working on the dosing head, valves and connections, flush the dosing pump with a harmless medium (water in most cases), to avoid unintentional contact with the metered medium.

The piston area must remain open for control reasons and may be dangerous if accessed directly.

CAUTION!
Stroke movement of the piston! There is a risk of crush injuries to hands. Do not reach into the piston area! Work in the piston area may therefore only be carried out with the dosing pump switched off.

WARNING!
Never look into the open end of a clogged line or valve. Chemicals may emerge unexpectedly and cause chemical or other burns to face and hands.

Before start-up, all screw connections must be inspected for correct tightness and leak-tightness, and must be re-tightened using an appropriate tool if necessary.

CAUTION!
If connections at the dosing head are loosened during operation, for venting or other reasons, leaking chemicals must be removed properly. Only in this way is it possible to effectively avoid the risk of injuries caused by chemicals and corrosion at the dosing pump.

ATTENTION!
If changing the chemical, check the materials in the pump and other system parts for chemical resistance. If there is a danger of chemical reaction between the different media, clean thoroughly beforehand.

IMPORTANT!
To operate the pump, mount the fan cowl in order to ensure sufficient cooling of the motor.

The protection class of the control unit is only ensured if the connection ports are protected by caps or the standard connectors are inserted.

DANGER!
Risk of burns. Shock wave: parts may fly off and cause fatal injury. FEDOS DX must not be used in potentially explosive atmospheres under any circumstances.

CAUTION!
Under certain operating conditions, the drive motor of the DX version might heat up considerably. This may cause burns to the hands. To avoid unintentional contact, provide an appropriate safety device.

WARNING!

Lethal voltage!
Proceed with caution when carrying out adjustment work on the inside of the ATE servomotor (optional for FEDOS E). Connections and internal limit switches might be live. Additional limit switches in the ATE drive may be under voltage (live) even when the auxiliary voltage is switched off. After installing the ATE servomotor or before start-up, re-attach the cover.

1.12 Transportation

No special devices are required for transportation of the dosing pumps. However, it is advisable to choose a transport method appropriate for the weight of the dosing pumps (e.g. transport trolley). If transporting with the oil drained, the dosing pump should preferably be placed in the horizontal position. Otherwise, stability must be ensured by screwing it onto the transport frame.

1.13 Scope of delivery

IMPORTANT!
Carefully unpack the dosing pump and any accompanying accessories ordered, so that small parts are not left inside the packaging. Compare the delivery content with the delivery note immediately. If there are any discrepancies, determine the cause.

The following are part of the scope of delivery:
- Dosing pump FEDOS E or DX
- Suction and discharge side connections
- Gear oil
- 2x cables (for FEDOS DX)
- Operating Manual
- ATE servomotor (optional)
- Separate fan (optional)

2. General

2.1 Proper intended use

The device is intended for the following purpose only: the conveying and dosing of chemicals.

Operating safety is guaranteed only if the device is used for its intended purpose. All other types of use are prohibited and will invalidate the warranty. The operating conditions described in chapter 5 "Technical Data" must be observed!

2.2 Structure of the dosing pump

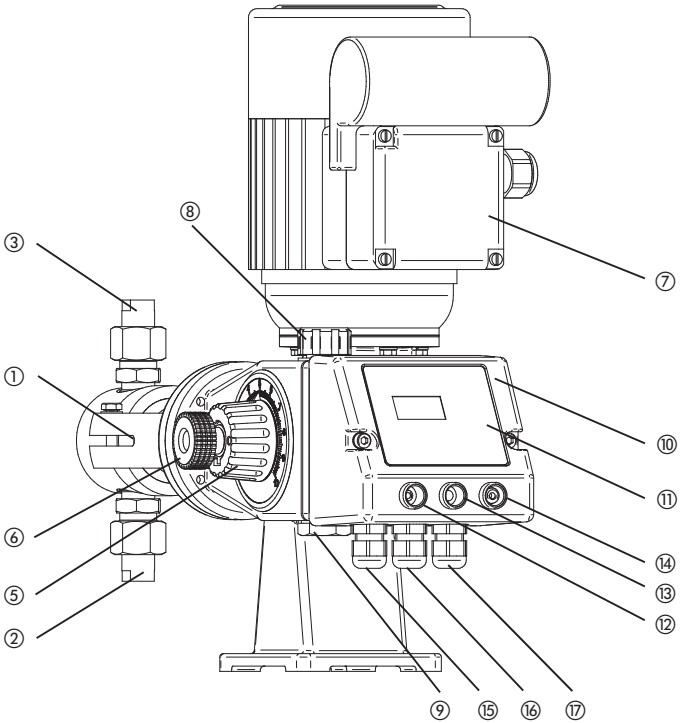

① Dosing head
② Suction side valve
③ Discharge side valve

⑤ Stroke length adjustment
⑥ Stroke length adjustment lock
⑦ Motor terminal box (FEDOS E voltage supply)
⑧ Oil inlet
⑨ Oil outlet
⑩ Control unit (FEDOS DX)
⑪ Operating panel with display
⑫ "External switch-off" contact
⑬ "Level input" contact
⑭ "External control" contact
⑮ Voltage supply (FEDOS DX)
⑯ Motor connection
⑰ Fault signalling relay

3. Function

Piston dosing pumps of the FEDOS series are used in industry, in the process engineering sector, as well as in water conditioning and the treatment of waste water.

FEDOS E

The FEDOS E is used when no control is required for constant dosing. For this the voltage supply is connected directly to the terminal box of the motor. To adapt the dosing capacity the stroke length can be adjusted manually from 0 … 100%, or the motor speed is controlled by means of a separate frequency converter. The FEDOS E is optionally available with remote electrical stroke-length adjustment (ATE servomotor).

The FEDOS E can be operated in Zone 1 potentially explosive atmospheres if the corresponding drive is taken into account. Further information can be found in section 12.

FEDOS DX

The "intelligent" FEDOS DX is used if the dosing pump is to be integrated in controls or automatic control systems. It enables versatile adaptation to a variety of different control signals and system monitoring equipment. The signals required for external activation of the dosing pump can be from simple potential-free N.O. contacts of water meters or controllers, or analogue 0/4 … 20 mA signals. For contact actuation (pulse control), the stroke frequency can be adapted by division or multiplication. For internal operation (own stroke), the dosing pump can be adjusted continuously between 0 and max. 142 strokes/min, depending on version.

Principle of operation

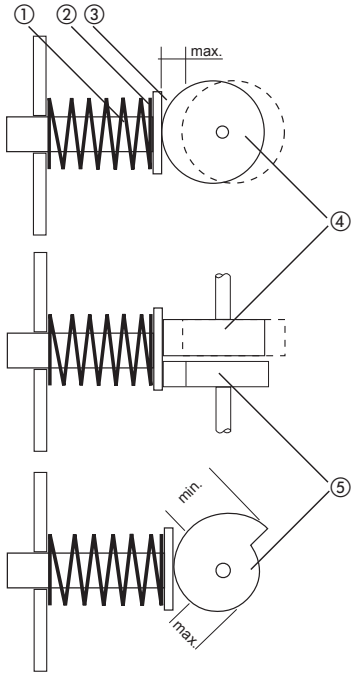

① Piston rod

② Return spring for suction stroke

③ Tappet plate

④ Drive cam

⑤ Stroke limiting cam

Like the roller bearings, the worm gear set of the single-speed gear runs in an oil bath. Dosing takes place when the rotation of the drive cam ④ causes movement of the piston rod ①. The suction stroke is produced by the return movement due to spring force. The stroke length is adjusted by limiting the tappet return movement using a manually adjustable cam disk (stroke limiting cam ⑤) as stop. The adjustment range is from 0 to 100%.

4. Dimensioned drawings

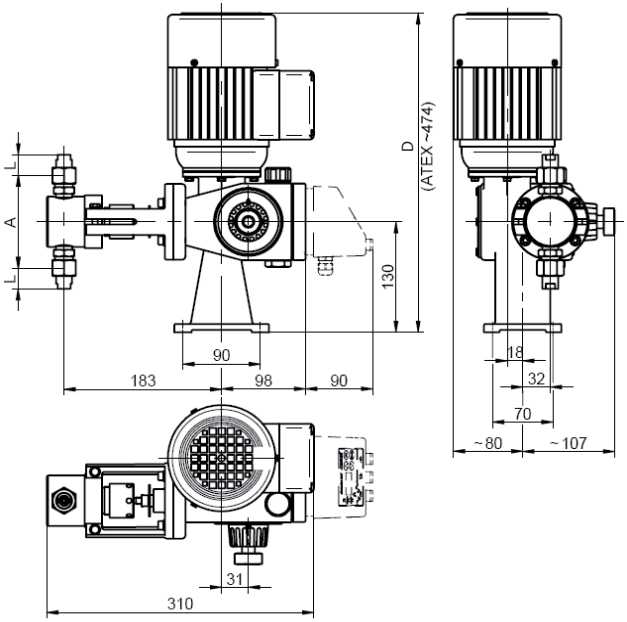

Dimensional drawing FEDOS E/DX

E/DX[1]	A	L
1 … 2	125	25
5 … 30	114	25

Motor	W
EMG	353
ATB	373
VEM	364
ATEX version	474

All dimensions in mm

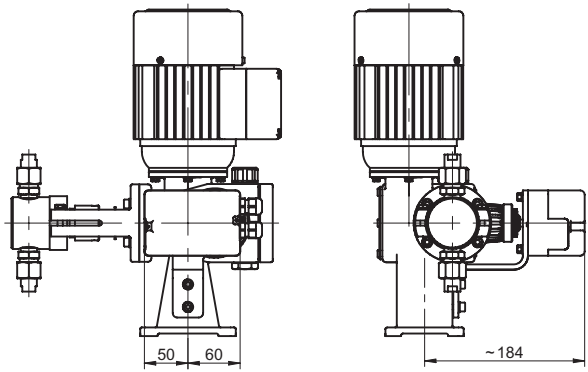

Dimensional drawing FEDOS E with ATE servomotor

5. Technical data

FEDOS E/DX		01	03	06	1	2[1)]	5[1)]	8[1)]	17[1)]	30[1)]
Delivery rate at max. pressure	l/h	0,17	0,31	0,63	1,42	2,13	4,8	8,5	17	31,5
Stroke volume	ml/ stroke	0,11			0,25	0,25	0,56	1	2	3,7
Max. pressure	bar	40								25
max. pressure [3)]	bar	100						80	-	-
Stroke frequency	rpm	26	48	95		142				
Piston-Ø	mm	4			6		9	12	17	23
Stroke length	mm	9								
Suction lift	mbar	800								
max. supply pressure ∑ static + dynamic	mbar	500								
max. ambient temperature[2)]	°C	40								
Power output E (3~)	W	50					250			
Power output DX (1~)	W	120								
Weight	kg	11			16					

1) E/DX 2…30 not for 60Hz operation, special sizes E/DX 2A … 30A available for 60 Hz operation.
The details about delivery rate and stroke frequency are also applicable for 60 Hz operation.
2) Media temperature 60 °C, short time 80 °C.
3) High-pressure version

Dimensioning of the lines

The following approximate values are applicable for the dimensioning (maximum length) of suction and pressure lines:

- 2 m for peak flow velocity of 0.5 … 0.7 m/s
- 10 m for peak flow velocity of 1.0 … 1.5 m/s

(without pulsation damper or suction pressure regulator, and without overdimensioning of the line).

This is applicable to chemicals with a maximum viscosity of 20 mPAS (the highest viscosity is at lowest system temperature, for example in case of delivery in winter) and with a maximum density of 1100 kg/m³. The maximum flow velocity is calculated as follows: $Q \times \pi / A$ (Q = flow rate, A = line diameter).

For all other chemicals and installation situations please refer to the seminar documents of the manufacturer "Kleine Einführung in die Dosiertechnik" (Short introduction into dosing technology) or to other applicable guidelines from specialist literature on fluid dynamics (i.e. Kalide ISBN 3-446-13092-6).

Avoid overloading of the pump, the piping or the instruments.

Control unit (FEDOS DX)	Standard version	CSA version
Power supply	95 … 264 V AC, 48 … 63 Hz	
Connection	1.8 m cable, 3-wire, 0.75 mm^2 Shock-proof plug	1.8 m cable, 3-wire, 0.75 mm^2 UL/CSA connector
Power consumption (without motor)	10 W	
ISO class	F	
Protection class	IP 55*	
Max. admissible ambient temperature	40 °C	
Digital display	3-digit display for stroke frequency and level status	
LEDs for functional display	in operation (green)	
	fault (red)	
	external control (green)	
Plastic film keypad	4 keys for programming and operation	
Weight	0.8 kg	
Inputs		
External shut-off	External switch off for dosing pump, provided by the customer, by potential free contact (normally closed, N.C.), 3.5 mm jack socket (M12x1 plug optional)	
Level input	Connection of accessories (e.g. suction line with level switch) 5 V DC voltage, low level alert and main alarm, Contact: normally closed, N.C. 3.5 mm jack socket (M12x1 plug optional)	
External control	pulse input or analogue input	
	RCA socket (M12x1 plug optional)	3-pin socket
Pulse input	potential-free contact (normally closed, N.C.) provided by operating company	
	5 V DC voltage	
	Pulse length min. 30 ms	
Multiplication/division of pulses	1 / 2 / 4 / 8 / 16 / 32 / 64	
Analogue input	0/4 … 20 mA signal **	
	Working resistance: 150 Ohm	
Outputs		
Fault signalling relay	voltage-free changeover contact, max. 250 V AC, 2.5 A or max. 30 V DC, 2.5 A, Cable connection	

* if connection ports are protected by caps, or standard connectors are inserted.

**1 If several dosing pumps are connected in series with 4 … 20 mA control, an additional device (splitter) is necessary.

5.1 Electric motor data

FEDOS		DX 01…30		E 01…2	E 5…30
Standard motor, type		AF 63/4B-7R	ECS63K4	DAS 63 S4	DAS 63 K4
Speed	rpm	1390	1650	1400	
Voltage	V 1~	230	120	230/400	
Nominal current	A	1,15	2,2	0,5	0,95
Power output	kW	0,12		0,05	0,25
Frequency	Hz	50	60	50	
Protection class		IP 55		IP 55	
ISO class		F		F	

Explosion-proof motors for FEDOS E

FEDOS E (ATEX)		01…30	01…30
Type		KPER63K4	F63CTV/a4
Explosion protection		increased safety EExeIIT3	EXdeIICT4 pressure-resistant enclosure
Speed	rpm	1370	1410
Voltage	V 1~	230/400	230/400
Nominal current	A	0,83/0,48	1,0/0,6
Power output	kW	0,12	0,18
Frequency	Hz	50	50
Protection class		IP 55	IP 55
ISO class		F	F

5.2 Technical data, ATE servomotor FEDOS E (optional)

Reversible servomotor with self-locking step-down gear. Connections via cable glands. Angle of rotation limited by two internal limit switches.

Servomotor		**NK 1510**		**NK 1510-PMR-NK**	
Part No.		79466	79468	79467	79469
FEDOS E		E4 ... 380			
Voltage		230 V AC, 50/60 Hz	115 V AC, 50/60 Hz	230 V AC, 50/60 Hz	115 V AC, 50/60 Hz
Power consumption		7 VA			
Regulation time	50 Hz	45 s			
	60 Hz	39 s			
Regulation bevel		270° ⇔ 0...100%			
Protection class		IP 65			
Ambient temperature		-15 ... +60			
Weight		2.5 kg			
Inputs					
Control		3-point step control		0(4) ... 20 mA	
Working resistance at 0/4...20 mA		-		250 Ω	
Outputs					
Position feedback signal for remote display		0...1000 Ohm, max. 2 W		0(4) ... 20 mA 0(2) ... 10 V	

See the enclosed operating instructions for the ATE servomotor for further technical data.

6. Delivery characteristic curves

The delivery characteristic curves refer to water at 20 °C (68 °F) and a suction lift of 0.5 m. The medium (density and viscosity) and temperature cause the delivery rate to change. Dosing pumps must therefore be gauged in litres for the application. At 60 Hz operation, values are increased by a factor of 1.2.

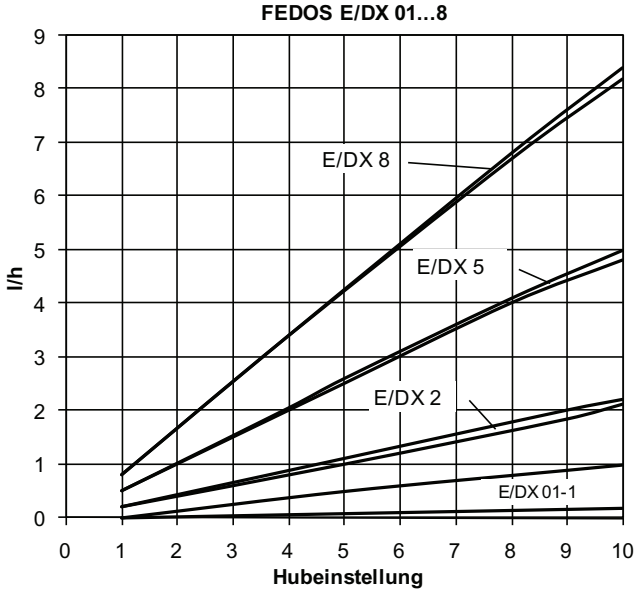

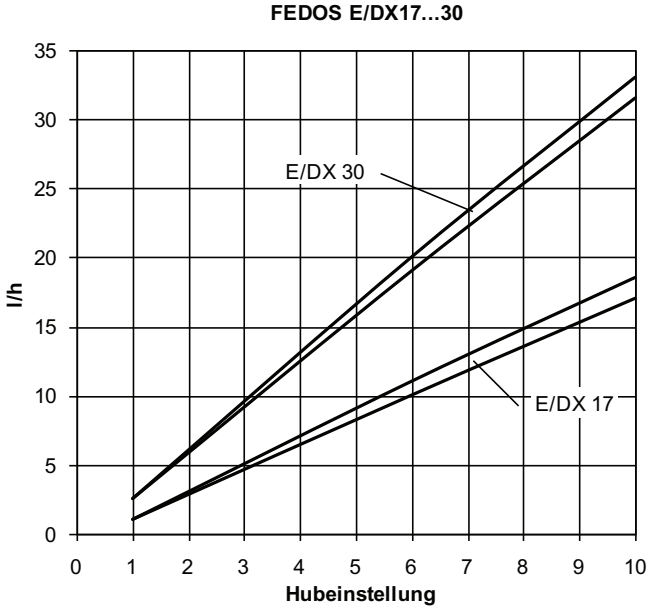

7. Installation

7.1 General information

Local rules and regulations must be taken into account when selecting a dosing pump for designing a system, and for installation and operation. This applies to the selection of the appropriate materials for the dosing pump, the handling of chemicals, and electrical installation.

Before installing the pump in areas with a potentially explosive atmosphere, the dosing pump must be checked to ensure that it meets the minimum requirements set by the applicable explosion protection regulations. For this purpose, the data on the dosing pump rating plate must be compared with the local requirements.

The technical specifications of the dosing pump (section 5) must also be taken into consideration, and the system designed accordingly (e.g. pressure loss for pipe dimensions i.e. nominal diameter and length).

The designer and operating company are responsible for ensuring that the entire system, including the dosing pump, is designed in such a way that no lasting damage occurs to system equipment or buildings in the event of chemical leakage due to the failure of wearing parts (e.g. wear of the packing) or burst hoses. If the chemical system represents a potential source of danger, the installation must be designed in such a way that no unreasonable consequential damage occurs, even if the dosing pump fails. We therefore recommend installing leakage monitors and collecting pans.

CAUTION
The FEDOS E/DX may not be used for dosing combustible and flammable fluids. For constructional reasons piston pumps are not leakage-free. This must be taken into account in the design of the process and the plant.

To increase dosing accuracy and ensure functional reliability, we recommend installing additional valves and accessories. These include pressure control valves, pressure relief valves, leakage monitors and low level indicators, as shown in the installation examples.

Always use appropriate tools for installation work. To avoid damage, never apply excessive force.

IMPORTANT!
To prevent seizing, threaded stainless steel parts (e.g. dosing head and valves) must be lubricated before being assembled (e.g. with PTFE spray).

ATTENTION!
Check the lubricant for compatibility with the chemical.

7.1.1 Installation of FEDOS E with ATE servomotor

The ATE servomotor is connected to the dosing pump and adjusted at the factory. When installing, sufficient installation space of at least 150 mm must be provided in order to allow later maintenance.

The electrical connection of the ATE drive must be made in accordance with locally applicable requirements and may only be carried out by technical personnel. The wiring diagrams (chapter 7.4) show the standard connection variant.

Cable type and cross-section must be chosen according to the motor data.

The cable passage through the housing must be made professionally. We recommend using gland connections with strain-relief clamp. The required protection class must be ensured by professional-standard installation of the electrical connections.

ATTENTION!
Note that the ATE servomotor can only be actuated when the main drive motor of the dosing pump is running. This means that the ATE servomotor must be locked electrically. Otherwise, the adjusting eccentric will suffer excessive wear, or be destroyed.

7.2 Installation location

The installation location of the dosing pump must be easily accessible by operating and service personnel.

ATTENTION!
Ambient temperatures above 40 °C are not permitted. Radiant heat from apparatus and heat exchangers must be shielded so that heat from the dosing pump can be dissipated sufficiently. Avoid exposure to direct sunlight. If the dosing pump is installed outside, provide a roof to protect it from the effects of weather.

Install the pump so that the suction and discharge valves are in vertical position. To ensure stability, the dosing pump must be screwed onto an appropriate surface. The system piping must not exert any force on the connections and valves of the dosing pump. To avoid dosing errors at the end of the process, the dosing pump must be locked electrically and hydraulically.

7.3 Electrical connection of the dosing pump

The electrical connection of the dosing pump must be made according to local rules and regulations and may only be carried out by qualified technical personnel. Cable type and cross-section of the supply lines must be chosen according to the motor data. The cable passage to the motor terminal box must be made professionally. We recommend using gland connections with strain-relief clamp. The required protection class must be ensured by professional-standard installation of the electrical connections.

For external switch-off of the dosing pump, see paragraph 8.3.

ATTENTION!
Dosing pumps with explosion-proof motors must be installed and commissioned by specialists qualified to work with equipment intended for use in potentially explosive atmospheres. The user is responsible for ensuring that explosion-proof motors are connected correctly. Both the motor and the dosing pump must be grounded to prevent electrostatic discharges.

DANGER!
Risk of burns. Shock wave: parts may fly off and cause fatal injury. FEDOS DX must not be used in a potentially explosive atmosphere under any circumstances. The electrical connection of the dosing pump must be made according to local rules and regulations and may only be carried out by qualified technical personnel.

NOTE!
The dosing pump must be plugged into a grounded power outlet.
The 230 V AC version of the FEDOS DX is connected by a shockproof earthing-pin plug. The 115 V AC version is equipped with a UL/CSA plug.

NOTE!
Signal cables must not be laid parallel to high-voltage current lines or mains cables. Lay supply and signal lines in separate channels. An angle of 90° is required at line crossings. If signal lines are more than 2 meters long, shielded cables must be used.

ATTENTION!
To avoid premature wear of the gear, always ensure the correct rotation direction of the motor: counterclockwise (to the left), looking toward the fan wheel.

7.3.1 Drive motor connection

IMPORTANT!

Note the data on the motor rating plate

Connection	FEDOS	Phases	Motor supplier	Note
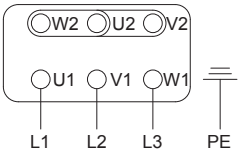	E	3~	All	Y-connection (Standard)
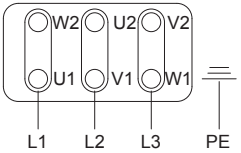		3~	All	Delta connection

FEDOS E three-phase motors

Connection	FEDOS	Phases	Motor supplier	Note
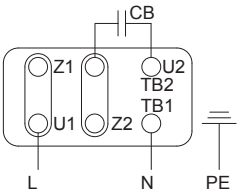	E	1~	ATB	
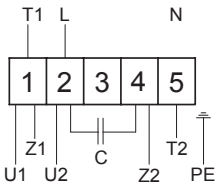		1~	EMG	230 V AC or 120 V AC (CSA)

FEDOS E alternating current motors

Connection	FEDOS	Motor supplier
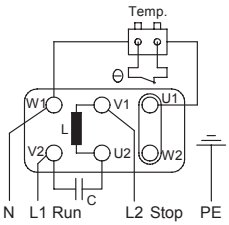	DX	ATB

Connection	FEDOS	Motor supplier
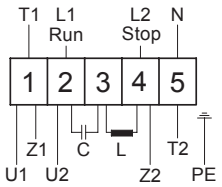	DX	EMG

FEDOS DX alternating curent motors

FEDOS DX Control unit		Standard version	CSA version
L1	RUN	BR (brown)	BK (black)
L2	STOP	BK (black)	RD (red)
N		BU (blue) or GY (grey)	WH (white)
PE		GN/YE (green/yellow)	GN/YE (green/yellow)

Connection between FEDOS DX control unit and motor

7.4 Wiring diagrams for ATE servomotor for stroke length adjustment

See the accompanying operating instructions for the ATE servomotor.

7.5 Level monitoring

If a level monitor is connected, the jack plug has to be covered by a plastic sleeve in order to maintain the protection class. The required sleeve is part of the level monitor (also in combination with a suction line).

With the level monitor connected, the dosing pump stops if the chemical level in the supply tank is low, in order to prevent air bubbles from entering the suction line and the dosing head. The red LED is lit. As soon as the level contact closes again, the dosing pump restarts.

The level sensor must be designed as a max. N.O. contact.

FEDOS is equipped with a 2-stage level monitor. When the first contact breaks (low level alert), the red LED begins to flash. The dosing pump continues to operate. The fault signalling relay is actuated. The dosing pump only stops when the second contact breaks (main alarm). The red LED is lit continuously.

The "low level alert" function is not available when using a 2-pin connector and a simple float switch.

NOTE!

A dummy plug (Part No. 29115) must be attached if a float switch is not connected. The dosing pump is delivered with a dummy plug already attached. If a float switch is to be connected, the dummy plug has to be removed before inserting the jack plug.

7.6 Pressure control and safety valves

Pressure control valves are used to optimise the dosing process. They are used:

- to increase the dosing accuracy in the case of fluctuating backpressure.
- when the dosing lines are long, in order to prevent excess delivery, since the accelerated medium continues moving due to its own inertia even after the delivery stroke has ended.
- to prevent siphoning, if the supply pressure is higher than system pressure.

Pressure relief and safety valves are used for overload protection of the dosing pump and the associated valves and lines. They prevent inadmissible pressure rises in the delivery side system of the dosing pump; for example, if shutoff valves close while the pump is running, or if the injection nozzle is clogged.

7.7 Injection nozzle installation

Injection nozzles are used to inject the metered medium into the main flow, while at the same time acting as non-return valve. The injection nozzle is usually mounted from the top into the main line. Mounting from below is recommended only for media that have a tendency to crystallise, in order to prevent air bubbles from being trapped in.

For media that tend to contaminate the injection nozzle, we recommend installing an injection nozzle that can be shut off and removed for maintenance purposes.

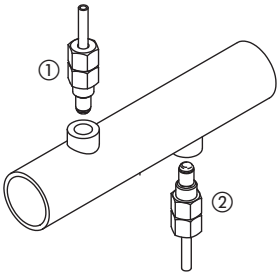

① Injection nozzle mounted from above, ② Injection nozzle mounted from below (for media that tend to crystallise)

7.8 Installation example

① Dosing pump
② Suction line
③ Electrical agitator
④ Tank
⑤ Pressure relief valve
⑥ Diaphragm shutoff valve
⑦ Injection nozzle
⑧ Pulsation damper

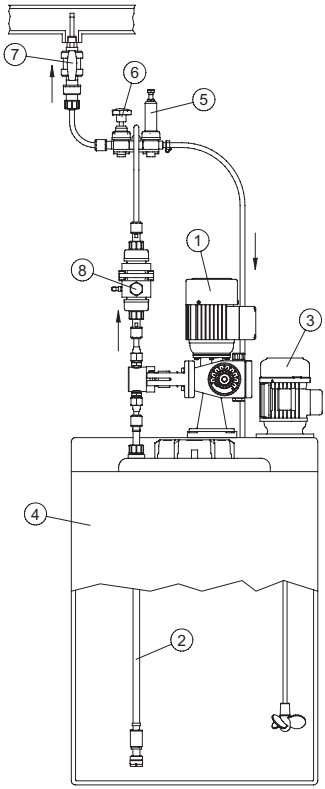

8. Operation

8.1 Stroke length adjustment

ATTENTION!
The stroke length must not be adjusted when the dosing pump is at a standstill!

Proceed as follows to adjust the stroke length:
1. Turn the mounting screw on the adjusting knob counterclockwise (to the left) to loosen it.
2. Set the stroke length to the required value according to the delivery characteristic curves (section 6).
3. Retighten the mounting screw without changing the stroke length setting.

8.2 FEDOS DX operating elements

The **operating panel has two green LEDs for operation and external control, one red LED for alarm, one 3-digit multifunctional display and four operator keys.**

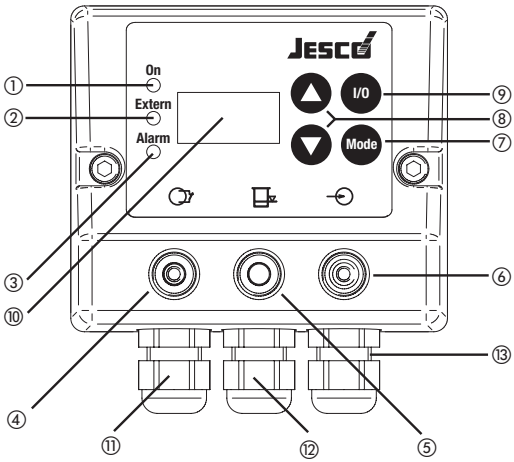

① "On" LED (Power)
② "Extern" LED (ext. control)
③ "Alarm" LED
④ External switch-off connection
⑤ Level input connection
⑥ External control connection
⑦ "Mode" key (operating mode selection)
⑧ Selection keys (▲ , ▼)
⑨ "I/O" key (ON/OFF switch)
⑩ Display
⑪ Voltage supply
⑫ Motor connection
⑬ Fault signalling relay connection

For connection assignments, see 8.8.

8.3 Switching on/off

The dosing pump is switched on/off using the I/O key. When disconnected, the display shows OFF. When the contact is opened for external switch-off, the dosing pump is also switched off. The "Extern" LED is also lit.

ATTENTION!
The dosing pump may be switched on/off remotely only by using the external switch-off - not by using the voltage supply.

8.4 Operating mode selection

The following operating modes can be set by simultaneously pressing the "Mode" and ▲ or ▼ keys:
- Manual control (internal operation)
- Pulse control (external cycle)
- Analogue control (control signal 0/4 … 20 mA)

In the as-delivered state, the dosing pump is set to manual control.

Key		Display	Description		Key		Display	Description
Mode +	▼	INT	Manual control		Mode +	▼	64.1	Pulse control
	▼	1.64	Pulse control			▼	32.1	
	▼	1.32				▼	16.1	
	▼	1.16				▼	8.1	
	▼	1.8				▼	4.1	
	▼	1.4				▼	2.1	
	▼	1.2				▼	1.1	
						▼	4.20	Analogue control
						▼	0.20	

Manual control

The dosing pump delivers a constant flow of chemical per unit time, regardless of the process.

To set this operating mode, proceed as follows:

1. Press the "Mode" and ▲ or ▼ key simultaneously until INT is displayed.
2. Release the "Mode" key. The current stroke frequency is displayed (strokes/min)
3. Use the ▲ and ▼ keys to change the stroke frequency

Pulse control

The dosing pump delivers a constant flow of chemical per input pulse. A maximum of 64 pulses are buffer-stored, if the pulse rate exceeds the processing speed. To set the pulse multiplication/division, simultaneously press the "Mode" and ▲ or ▼ keys until one of the following values is displayed:

- for a ratio of 1:1, i.e. the dosing pump executes one dosing stroke after each pulse,
- 1.2 to 1. 64 for pulse multiplication or
- 2.1 to 64. 1 for pulse division

The "Extern" indicator is lit.

Settings for pulse multiplication and division: 1, 2, 4, 8, 16, 32 and 64.

Example	
1. 64	The dosing pump executes 64 dosing strokes after each pulse.
64. 1	The dosing pump executes one dosing stroke after 64 pulses.

Analogue control

The dosing pump delivers a quantity of the chemical proportional to the input signal. To set the operating mode, press the "Mode" and ▲ or ▼ keys simultaneously until one of the following values is displayed:

- 0. 20 for 0 … 20 mA signal or
- 4. 20 for 4 … 20 mA signal

When the "Mode" key is released, the stroke frequency corresponding to the current is displayed. The "Extern" indicator is lit. If the current is greater than 20 mA (display: OVL) or less than 4 mA (display: E-I), the alarm indicator is lit, the fault signalling relay switches and the dosing pump stops. The stroke frequency of the dosing pump is proportional to the input signal.

8.5 Alarm

The dosing pump allows monitoring of the dosing process. An alarm is indicated visually on the display and transmitted by the fault signalling relay.

	Alarm LED	Alarm relay	Pump	Display
Level pre-alarm	flashes	switches	continues to operate	Number of strokes
Level main alarm	is lit	switches	stops	E - L

Internal error

The dosing pump carries out a self-check which switches off the pump, if no stroke has been executed two seconds after startup of the motor (e.g. in the case of excessively high backpressure) or if the stroke sensor does not work (display E-2). The alarm is reset by pulling out the mains plug.

The functions of the LEDs and built-in fault signalling relay are shown in the following table:

Condition	LED 1 ON	LED 2 Extern	LED Alarm	Fault signalling relay			Display
				R0	RW	R1	
Voltage supply absent				closed			-
Dosing pump running	☼				closed		Number of strokes
Dosing pump off (by ON/OFF switch)				closed			OFF
Dosing pump off (by external contact)		☼		closed			OFF
Low level alert	☼	*)	flashes	closed			Number of strokes
Level main alarm	☼	*)	☼	closed			E - L
Dosing pump fault (proximity switch, stroke sensor)	☼	*)	☼	closed			E - 2
Dosing pump fault (current < 4 mA)	☼		☼	closed			E - I

*) LED 2 lights up in operating modes 1.1 - 1.64; 0…20 mA and 4… 20 mA

8.6 Other settings

8.6.1 Maximum number of strokes

The Mode and I/O keys are held depressed while applying the voltage and the maximum number of strokes of the dosing pump is set with the keys ▼ and ▲. When the "Mode" key is released, normal operation starts.

8.6.2 Alarm relay

In the default setting the relay is without current in the case of error and OFF. If the keys "Mode" and ▲ are held depressed while the voltage is applied (display RE0), the relay is without current in the case of error and OFF, with the keys "Mode" and ▼ the relay picks up in the event of error (display RE1).

8.7 Factory setting

- The initial status of the FEDOS DX is "OFF".
- Depending on the technical specifications, the maximum stroke frequency is preset (see section 5).
- In case of a fault or "OFF", the fault signalling relay is not picked up.

8.8 Connections and cable assignments

Control unit FEDOS DX						Standard version	CSA version
⑫	L1	RUN	Motor			BR (brown)	BK (black)
	L2	STOP				BK (black)	RD (red)
	N					BU (blue) or GY (grey)	WH (white)
	PE					GN/YE (green/yellow)	GN/YE (green/yellow)
⑪	L		Power supply 230 V AC, 50/60 Hz or 120 V AC, 50/60 Hz			BR (brown)	BK (black)
	N					BU (blue) or GY (grey)	WH (white)
	PE					GN/YE (green/yellow)	GN/YE (green/yellow)
⑬	R0	Break contact	Fault signalling relay (1.5 m cable)	R0 RW R1 Fault	R0 RW R1 Operation	BR (brown)	RD (red)
	Rw	Changeover contact				BU (blue) or GY (grey)	WH (white)
	R1	Make contact				BK (black)	BK (black)

Connection		Connector	Housing	Cable	
④	External shut-off	3.5 mm jack plug	Socket	① ② 2.5 m 3-wire (cable included in delivery)	
				① Input (+)	RD (red)
				② Ground (GND)	BK (black) / WH (white)
		M12 x 1, A coded (optional)	Plug	1 2 4 3	
				1 = input (+)	BN (brown)
				2 = ground (GND)	WH (white)
⑤	Level input	3.5 mm jack plug	Socket	①②③ Manufacturer's accessories	
				① Main alarm	RD (red)
				② Low level alert	WH (white)
				③ Ground (GND)	BK (black)
		M12 x 1, A coded (optional)	Plug	1 2 4 3	
				1 = low level alert	BN (brown)
				2 = main alarm	WH (white)
				3 = ground (GND)	BU (blue)
⑥	External control	RCA	Socket	①② 1.5 m 2-wire (cable included in delivery)	
				① Input (+)	BN (brown)
				② Ground (GND)	WH (white)
		CSA version	Plug	2 3 1 1.5 m, 3-wire (cable included in delivery)	
				1 = input (+)	BN (brown)
				2 = -	BK (black)
				3 = ground (GND)	BU (blue)
		M12 x 1, B coded (optional)	Plug	1 2 4 3	
				1 = ground (GND)	BN (brown)
				2 = pulses	WH (white)
				3 = pulses	BU (blue)
				4 = ground (GND)	BK (black)

NOTE!

The protection class of the control unit is only ensured if the connection ports are protected by caps or the standard connectors are inserted.

9. Start-up

CAUTION!

The personal protective equipment specified by the applicable accident prevention regulations must be worn whenever working on the dosing pump/system!

Protective clothing

Protective gloves

Protective goggles

1. All the work described under "Installation" (Section 7) must be carried out before starting the dosing pump.
2. Fill the dosing pump with the oil supplied. For oil grade and quantity, see section 11.1.
3. The FEDOS E dosing pump is switched on by an externally installed control system. The FEDOS DX has its own control. The initial status of the FEDOS DX is OFF. Electrical connection and the control types are explained in section 8, FEDOS DX operating controls.
4. The manual capacity adjustment should be set to maximum stroke for better priming. During the initial priming, there should be no backpressure. For this purpose, we recommend installing a relief valve on the discharge side of the dosing pump.
5. If a priming aid has been installed, this must be filled with chemical first. If the dosing pump does not prime, switch off the dosing pump, unscrew the discharge valve and fill the dosing head with fluid. If non-hazardous, the medium itself can be used; otherwise use a neutral medium that will not disturb the process. (In many cases, water can be used.)

WARNING!

Chemical may spray out. This may lead to chemical or other burns. Ensure that the discharge line is depressurised before disconnecting.

Then reinstall the discharge valve, switch on the dosing pump and allow it to prime. (A priming aid is recommended. See example installations.)

6. If there is a vent valve integrated in the dosing head or installed as a separate fitting, open it while the dosing pump is operating until fluid comes out. Then close it again. In the case of outgassing media, allow the fluid to flow off continuously (about 1 drop per 1 - 3 strokes). The escaping fluid flows through a hose back into the tank.
7. When correct operation has been established, set the desired delivery rate using the adjusting knob (see section 8.1) or the remote control adjustment. For an initial approximation, refer to the delivery characteristic curves (Section 6).

NOTE!

Depending on the installation and the chemicals used, these values may differ and must be checked under operating conditions.

8. The manufacturer of the dosing equipment is not responsible for damage due to excessive or insufficient flow rates at the dosing pump or incorrect or faulty installation of peripheral fittings.

9.1 Start up of FEDOS E with ATE servomotor

Switch on the main drive motor of the dosing pump. An electrical interlocking system then allows ATE drive adjustment. To check the direction of rotation, send short control pulses to the ATE servomotor. If the direction of rotation is wrong, adjust its direction as described in the ATE servomotor operating instructions. To check the limit stop of the integrated limit switches, the ATE servomotor must be moved to the end position. The factory-set angle of rotation is 270°. If required, the maximum delivery rate can be changed by limiting the angle of rotation. To do this, the trigger cams of the limit switches are moved.

10. Shutdown

Before starting any maintenance work or before long downtimes, drain the chemicals from the dosing pump and rinse it thoroughly with a neutral medium.

CAUTION!
Excess chemicals must be disposed of properly. Observe the applicable accident prevention regulations and wear personal protective equipment.

Protective clothing

Protective gloves

Protective goggles

CAUTION!
The dosing pump must be disconnected from the voltage supply and secured to prevent it being restarted.

CAUTION!
Before disconnecting the discharge line from the pump discharge valve, release the pressure so that chemicals do not spray out.

The discharge and suction valves should be unscrewed in order to drain the dosing head.

10.1 Disposal of old equipment

If the equipment is being disposed of, it should be washed thoroughly. Residual chemicals should be disposed of properly. The equipment was manufactured in accordance with the ROHS guideline and the waste electrical equipment legislation. The manufacturer will take care of disposal if the equipment is returned free of charge. It should not be disposed of as domestic waste!

Device revision

This operating manual applies to the following devices:

Device	Revision
FEDOS E/DX 01…30	06/2004

It contains all the technical information required for installation, start-up and maintenance. Should you have any questions or require further information regarding this operating manual, please contact the manufacturer or its official national representative.

11. Maintenance

These dosing pumps are produced to the highest quality standards, and have a long service life. Nevertheless some parts are subject to wear caused by operation (e.g. piston, valve seats, valve balls). Regular visual inspections are therefore necessary in order to ensure a long operating life. Regular maintenance will protect the dosing pump from operation interruptions. The manufacturer recommends maintenance once per year, provided the local regulations do not specify more frequent maintenance.

11.1 Lubrication

The piston dosing pump FEDOS E/DX requires little maintenance. The dosing pump gear is lubricated with gear oil of viscosity class ISO-VG460 according to DIN 51519 (corresponds to SAE 140 according to DIN 51512). The first filling, which is supplied with the product, is to be replaced after 5,000 operating hours or 1 year, whichever comes first. Further oil changes should be conducted after 10,000 operating hours or 2 years, whichever comes first. The filling capacity is about 0.25 l for gears. The actually quantity of gear oil required can be determined by checking the min.-max. markings of the oil-measuring stick.

ATTENTION!
FEDOS DX: To avoid damaging the proximity switch inside the gear housing, the dosing pump must be switched off before removing the oil dipstick.

11.2 Maintenance of the bearings

The upper bearing of the pinion shaft is a sealed and permanently lubricated ball bearing. The other rolling bearings in the gearing, and the plain bearings of the diaphragm rod, are lubricated by the gear oil. The oil also performs a heat dissipation function.

All bearings must be examined for wear after 10000 hours of operation. The service life of the rolling bearings depends on the applied loads.

11.3 Maintenance of the ATE servomotor (optional)

The ATE servomotor comes with lifetime lubrication ex factory. Nevertheless, regular inspections are recommended if the drive is operated in tough operating conditions, for example in high ambient temperatures or continuous operation. To re-lubricate the ATE gear, use molybdenum disulphite, for example "Molykote BR2plus" or "OKS400".

11.4 Replacing the piston

CAUTION!
Chemical may spray out. This may lead to chemical or other burns. The dosing pump must always be depressurised and rinsed with water or a suitable medium before starting any work on the dosing pump.

① Dosing head with discharge and suction valve

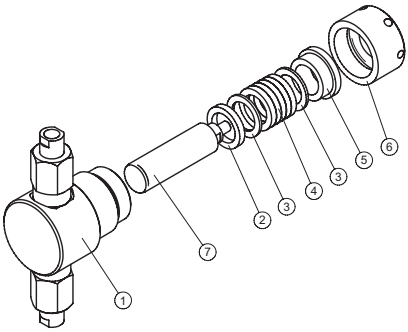

② Support ring
③ Supporting disk
④ Packing rings
⑤ Gland
⑥ Gland connection
⑦ Piston

Fig. 11.1: Dosing head FEDOS E/DX

CAUTION!

Stroke movement of the piston! There is a risk of crush injuries to hands. Do not reach into the piston area! Work in the piston area may therefore only be carried out with the dosing pump switched off.

The piston can be replaced as follows:

1. Switch off the pump!
2. Loosen the clamping screws at the clamping flange with an appropriate tool (open-end spanner SW10). (see Fig. 1)
3. Loosen the gland connection ☆ (see fig. 11.1) with an appropriate tool.
   With two cotter pin drives d6 inserted into two opposite bores in the gland connection, the connection can easily be loosened. (see Fig. 2)

NOTE!

To loosen the gland connection and the piston, the following assembly kits are available (consisting of cotter pin drives and open jaw wrenches): FEDOS E/DX 01…2 (A/N 37850), FEDOS E/DX 5…8 (A/N 37851) and FEDOS E/DX 17…30 (A/N 37852)

4. The dosing head ① is withdrawn from the holder in an axial direction.

IMPORTANT!

Slight rotary movements of the dosing head make dismantling easier.

5. The piston ⑦ is unscrewed from the piston rod with the help of 2 open jaw wrenches. Use one open-end spanner to fix the piston rod and the other to unscrew the piston from the piston rod. Grease the thread of the new piston with Molykote DX. The new piston ⑦ is now screwed into the piston rod. (see Fig. 3)
6. To replace the packing ④, unscrew the gland connection ⑥ completely from the dosing head. Remove the gland ⑤ and the supporting disc ③. The defective packing is removed using a packing worm. Alternatively, a hook can be used to remove the old packing.
7. Clean the packing area. Install the new packing rings ④ with staggered gaps and observe the correct sequence of support ring, supporting disc, packing rings and another supporting disc (see fig. 4). Install the gland hand-tight. (see Fig. 5)

CAUTION!

The packing material must be coordinated to the purpose of use (system pressure) and the chemical (chemical resistance).

8. The dosing head ① is now pushed in alignment with the piston ⑦ and the seating flange and fixed in the final position with the attachment screws.

IMPORTANT!

Make sure that the valves are aligned vertically. (see Fig. 4)

9. Carefully tighten the gland connection ⑥, to start the bedding-in process of the new packing. For this purpose the dosing pump is run dry first without connection to the medium. After a few strokes the gland is tightened once more.
10. After connecting the dosing lines, the pump is started as described in the section entitled Startup. For this the packing is to be prestressed further using the gland connection, until a minimum leakage occurs.

ATTENTION!

If prestressing is too strong, the return movement of the piston might be restrained. In this case slightly loosen the gland stud again.

11. If the piston wear is excessively high, try to find out the reason. For the possible causes, please refer to "Troubleshooting" (Section 14).

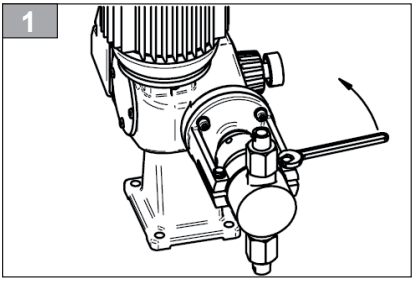

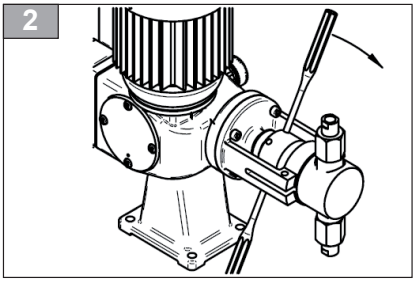

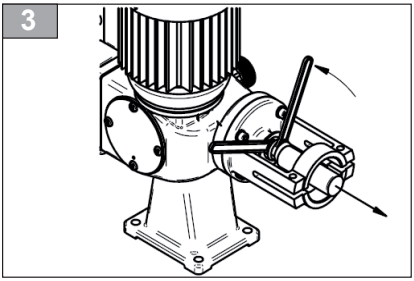

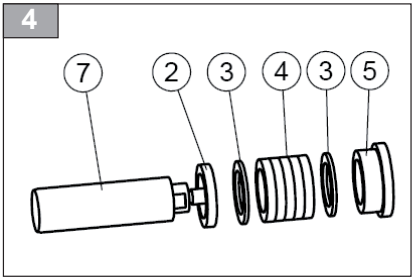

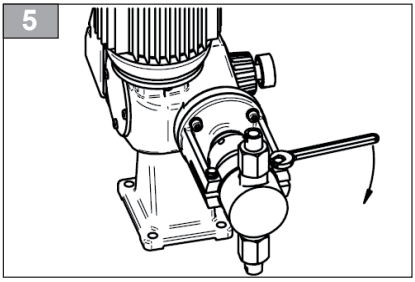

11.5 Valves

The dosing pump valves must be cleaned regularly.

NOTE!

When screwing the valves into the dosing head, observe the tightening torque of 2 Nm ±20 %.

CAUTION!

Chemical may spray out. This may lead to chemical or other burns. The dosing pump must always be depressurised and rinsed with water or a suitable medium before starting any work on the dosing pump.

NOTE!

Dirty valves will affect the dosing accuracy.

Valves DN 3 / DN 4, FEDOS E/DX 01…2

Double-ball valves

Suction valve

Discharge valve

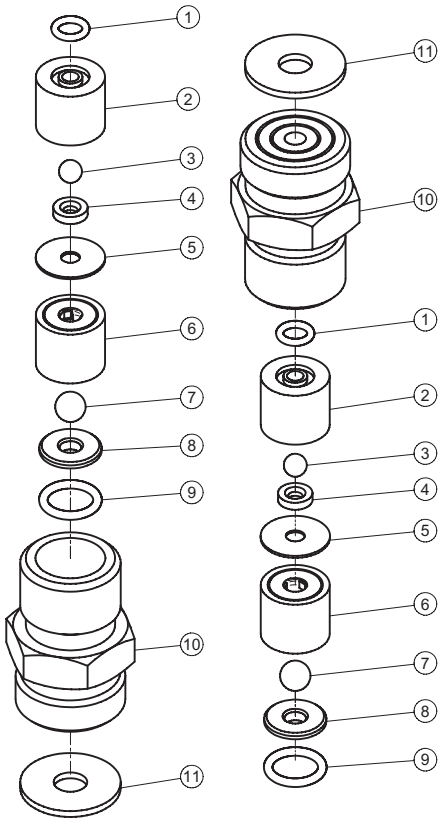

① * O-ring

② Ball guide DN3

③ *Valve ball DN3

④ *Valve seat DN3

⑤ *Flat gasket

⑥ Ball guide DN4

⑦ *Valve ball DN4

⑧ *Valve seat DN4

⑨ * O-ring

⑩ *Valve body

⑪ *Flat gasket

* included in the spare parts kits.

Valves DN 6, FEDOS E/DX 5 … 30

Double-ball valves

Suction valve

Discharge valve

Discharge valve

Spring-loaded valves

Suction valve

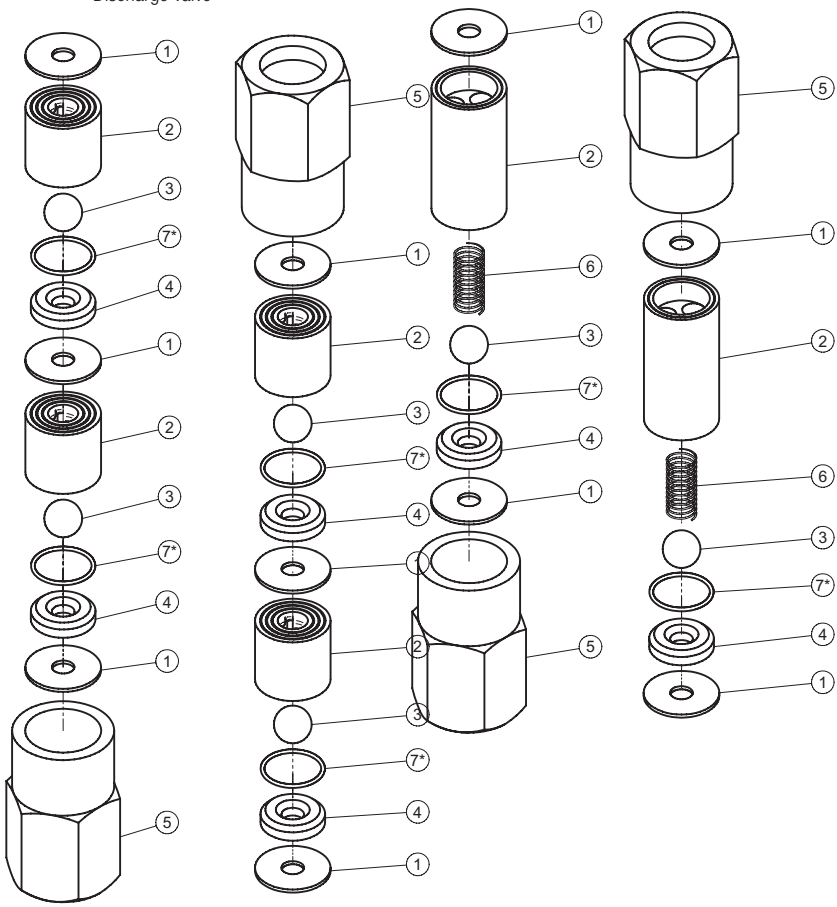

① * Flat gasket

② Ball guide

③ *Valve ball

④ *Valve seat

⑤ Valve body

⑥ *Compression spring

(⑦ additional O-rings, for high-pressure only)

* included in the spare parts kits

12. Explosion-proof dosing pumps

12.1 General

The FEDOS E explosion-proof dosing pump is an electro-motor-driven, explosion-proof piston dosing pump of equipment category 2, group II.

In combination with an explosion-proof motor (Ex II 2 G E Ex e II T3 or Ex II 2 G E Ex d/de IIB/IIC T4) it is used for dosing fluids in Zone 1 potentially explosive atmospheres. The dosing pump carries the Ex mark "Ex II 2 G c k T4 03 ATEX D085".

ATTENTION!
The dosing pump is not intended for dosing gaseous media or solids.

DANGER!
Risk of burns. Shock wave: parts may fly off and cause fatal injury. FEDOS DX must not be used in potentially explosive atmospheres under any circumstances.

12.2 Special conditions

The minimum requirements for the zone classification must be ensured if using the dosing pump in areas with a potentially explosive atmosphere. The dosing pump itself and the motor must meet the minimum requirements.

CAUTION!
The FEDOS E may not be used for dosing combustible and flammable fluids.

13. Troubleshooting

Problem	Possible cause	Remedy
Dosing pump not delivering or output too low.	Valves leaking or blocked.	Clean the valves and vent the dosing pump. See also "Start-up" Tighten the screw connections.
	Valves incorrectly installed.	Reassemble the valves. Ensure that the valve balls are located above the valve seats.
	Suction valve or suction line leaking or blocked.	Clean or seal the suction line.
	Suction lift too high.	- Set the dosing pump at the inlet. - Install the pulsation damper on the suction side. - Install a priming aid.
	Viscosity too high.	- Install spring-loaded valves. - Increase the pipe diameter. - Use special dosing head >> Contact manufacturer
No stroke movement observed	Dosing pump set to zero stroke.	Set the stroke length adjusting knob correctly.
	Diaphragm return spring broken.	Replace the spring.
	Power supply interrupted.	Switch on power supply.
Dosing pump delivery rate too high	Pressure on suction side too high (pump siphoning).	Install a pressure control valve on the discharge line.
Heavy leakage at piston	Packing not tightened strong enough.	Tighten gland stud carefully.
	Piston has longitudinal grooves due to normal wear.	Replace piston and packing. See also section 12, Maintenance.
	Excessive wear due to abrasive medium.	Replace PTFE packing with Aramid packing.
Dosing pump very noisy.	Roller bearing defective.	Replace the roller bearing.
	No oil in the gearing, or too little	Top up the oil as described in "Maintenance".
Motor hums and does not start.	Wrongly connected.	Check electrical wiring.
	Capacitor defective, wrong size or connected incorrectly.	Connect the capacitor correctly or replace.
	Pressure too high.	Check the process.
Alarm states indicated by red LEDs on the display.	Low level alert Level main alarm Internal error	Check functions as described in chapter 8 (FEDOS DX Operation).
The dosing pump switches off automatically.	The dosing pump has been disconnected from the power supply in an uncontrolled way.	Use only an external switch-off to switch the pump on/off. See paragraph 7.4 and 8.3

If the problem cannot be solved with the above remedies, please return the dosing pump to the factory or contact our After-Sales Service for further assistance. Repairs will be carried out immediately.

14. Spare parts

Genuine spare parts authorized by the manufacturer ensure greater safety. Wearing parts for the FEDOS E/DX are available as a spare parts set.

14.1 Spare parts list FEDOS E/DX 01 … 06

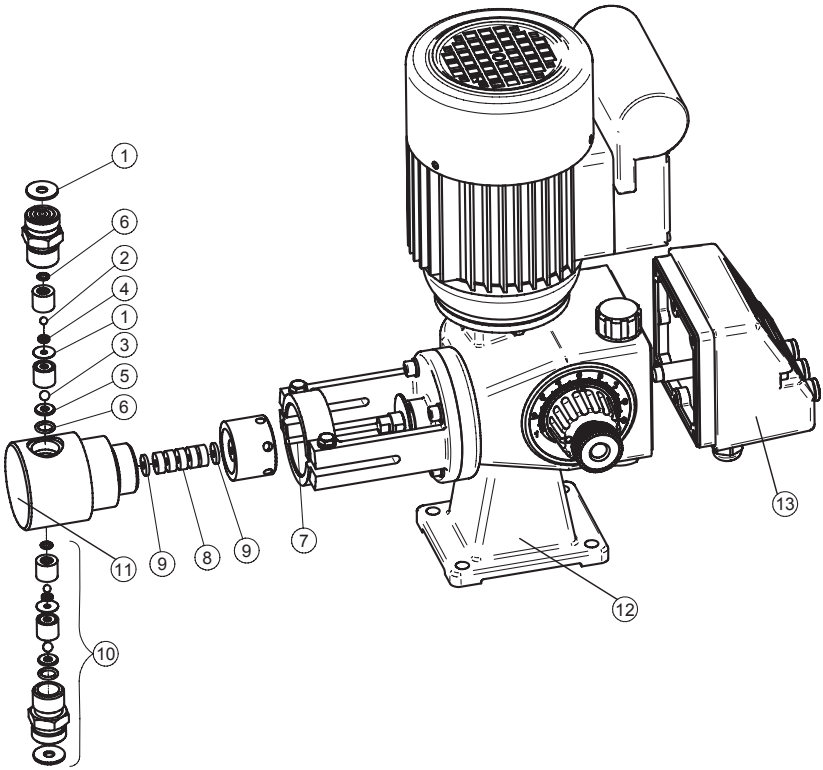

Spare parts for FEDOS E/DX			**01…06**
Item	Description	Material	Order No.
⑦	Piston	Stainless steel	29232
	Piston for high-pressure		29227
⑧	Packing ring PTFE/silk	PTFE/silk	81014
	Packing ring PTFE/Aramid for high-pressure	PTFE/Aramid	81725
⑨	Supporting disk	PVDF	31712
⑫	Drive E/DX 01		35743
	Drive E/DX 03		35744
	Drive E/DX 06		35715
⑬	Control unit Europa		34897
	Control unit CSA		35187
	Control unit M12x1		35565

Spare parts set for FEDOS E/DX with double ball valves		**01..06 up to 40 bar**	**01…06 High-pressure**
Consisting of: ① Flat gaskets ② Balls DN3 ③ Balls DN4 ④ Valve seats DN3 ⑤ Valve seats DN4 ⑥ O-rings ⑦ Piston ⑧ Packings ⑨ Supporting disk	Material	Order No.	Order No.
	Stainless steel/PTFE	33611	38608

⑩ Double-ball valves, complete		
Material	Order No.	
	Suction valve	Discharge valve
Stainless steel / ceramic / PTFE	35274	35275

⑪ Dosing head complete	**01..06 up to 40 bar**	**01…06 High-pressure**
Material	Order No.	Order No.
1.4571/PTFE-silk/PVDF	29234	29704

14.2 Spare parts list FEDOS E/DX 1 … 2

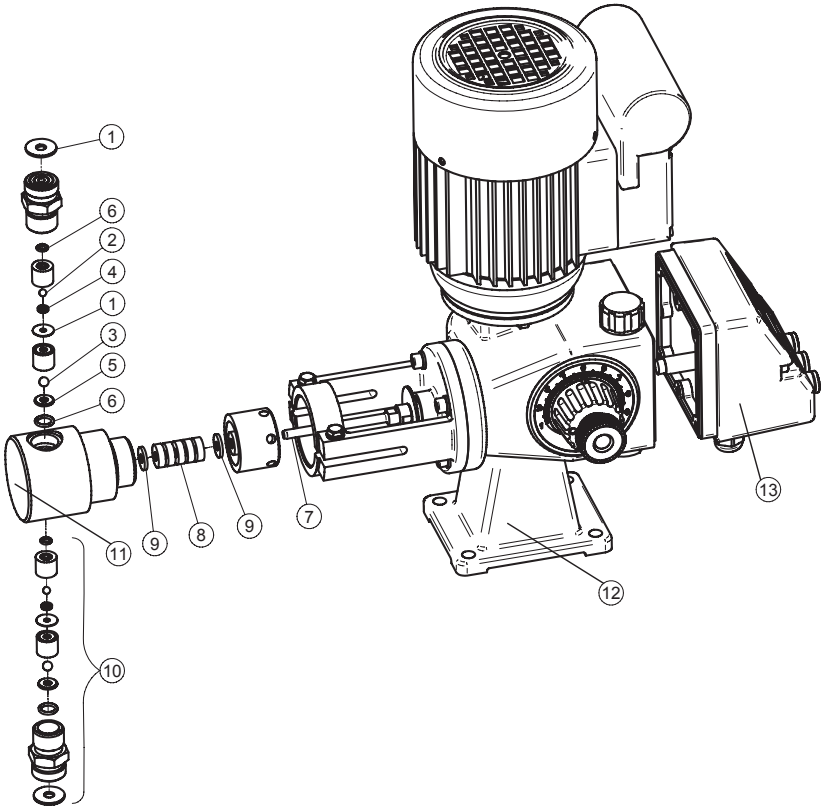

Spare parts for FEDOS E/DX		**1…2**
Description	Material	Order No.
⑦ Piston Piston for high pressure	Stainless steel	10602 99520
⑧ Packing ring PTFE/silk Packing ring PTFE/Aramid for high pressure	PTFE/silk PTFE/Aramid	81046 81726
⑨ Supporting disc	PVDF	31713
⑫ Drive E/DX 1 Drive E/DX 2		35715 35714
⑬ Control unit Europa Control unit CSA Control unit M 12x1		34897 35187 35565

Spare parts set for FEDOS E/DX with double ball valves		**1..2** up to 40 bar	**1..2** High-pressure
Consisting of:	Material	Order No.	Order No.
① Flat gaskets	PTFE	37689	37689
② Balls DN3	Ceramic		
③ Balls DN4	1.4401		
④ Valve seats DN3	Ceramic		
⑤ Valve seats DN4	1.4571		
⑥ O-rings	PTFE		
⑦ Piston	1.4571		
⑧ Packings	PTFE-silk		
⑨ Supporting discs	PVDF		

⑩ Double-ball valves, complete		
Material	Order No.	
	Suction valve	Discharge valve
Stainless steel / ceramic / PTFE	35274	35275

⑪ Dosing head complete	**up to 40 bar**	**High-pressure**
Material	Order No.	Order No.
1.4571/PTFE-silk/PVDF	37500	
1.4571/PTFE-Aramid/PVDF		37540

14.3 Spare parts list FEDOS E/DX 5 … 30

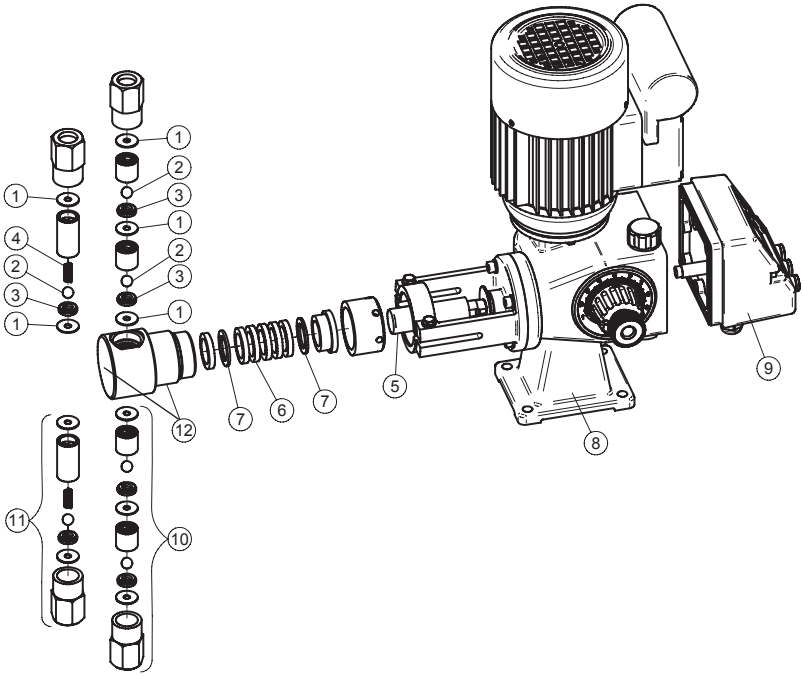

Spare parts for FEDOS E/DX		5	8	17	30
Description	Material	Order No.			
⑤ Piston	Stainless steel	10616	10622	10632	10652
⑤ Piston for high-pressure		37896	38655	-	-
⑥ Packing ring	PTFE/silk	81257	81023	81025	81027
⑥ Packing ring for high-pressure	PTFE/Aramid	81711	81693	-	-
⑦ Supporting disk	PVDF	34643	31715	31717	31719
⑧ Drive E		35714			
⑨ Control unit Europa		34897			
⑨ Control unit CSA		35187			
⑨ Control unit M12x1		35565			

Spare parts set for FEDOS with double ball valves		E/DX 5	E/DX 8	E/DX17	E/DX30
Consisting of:	Material	Order No.:	Order No.	Order No.	Order No.
① Flat gaskets	AF	29949	29950	29951	29953
② Valve balls	1.4401				
③ Valve seats	1.4571				
⑤ Piston	1.4571				
⑥ Packings	PTFE-silk				
⑦ Supporting disk	PVDF				

Spare parts set for FEDOS with spring-loaded valves		E/DX 5	E/DX 8	E/DX17	E/DX30
Consisting of:	Material	Order No.	Order No.	Order No.	Order No.
① Flat gaskets	AF	37692	37693	37694	37695
② Valve balls	1.4401				
③ Valve seats	1.4571				
④ Compression spring	Hastelloy				
⑤ Piston	1.4571				
⑥ Packings	PTFE-silk				
⑦ Supporting disk	PVDF				

⑩ Double-ball valves, complete		
Material	Order No.	
	Suction valve	Discharge valve
Stainless steel/AF	26967	26968
Stainless steel / AF/FPM*	37971	37972
Stainless steel / AF/EPDM*	37973	37974

⑪ Spring-loaded valves, complete		
Material	Order No.	
	Suction valve	Discharge valve
Stainless steel/AF	28775	28776
Stainless steel / AF/FPM*	38382	38383
Stainless steel / AF/EPDM*	37978	37979

*) with additional O-rings for high-pressure

⑫ Dosing head complete for	E/DX 5	E/DX 8	E/DX17	E/DX30
Material	Order No.:	Order No.:	Order No.:	Order No.:
Stainless steel / PTFE-silk	23316	23317	23318	23320
Stainless steel / PTFE-silk*	-	37183	-	-
Stainless steel / PTFE-Aramid*	37897	-	-	-

*) for high-pressure

15. External vent (optional)

Functional description of vent motors

The fan cowl and fan blade of the drive motor are removed and replaced by the extended fan cowl with integrated fan. The fan has a direct mains connection, and therefore delivers the maximum quantity of cool air to protect the motor against overheating at all speeds. Separate fans can be operated over a wide voltage range, according to the technical data below. They can be connected to three-phase or alternating current power supply, if connected according to the instructions. For single-phase operation, an operating capacitor is included in the terminal box (see electrical wiring diagram). The fan motors work according to the direction of rotation. The air flow must be directed towards the motor.

Special versions available

- Extended fan cowl (for operation with tachogenerator or motor brake)
- Alternative mounting bracket
- Different fan cowl diameter

Technical data							
Motor size		63	71	80	90	100	112
Air flow rate m3/h		47	60	88	169	208	295
Power consumption W		27	30	28,5	86	86	84,5
Speed at 50 Hz (rpm)		2910	2870	2790	2880	2830	2770
Sound pressure level dB(A)		47	51	55	58	59	61
Protection class		IP 66					
Dimen-sions (mm)	Height	185	190	195	205	210	215
	Diameter	126	143	160	176	196	220
Nominal motor current (A)							
3~, 200...290 V, delta		0,092	0,095	0,090	0,28	0,27	0,27
3~, 346...500 V, Y		0,06	0,06	0,05	0,06	0,06	0,06
1~, 230 V		0,075	0,081	0,090	0,19	0,21	0,23
Part No.							
Motor supplier ATB		47000200	47000201	47000202	47000203	47000204	47000205
Motor supplier VEM		-	47000101	47000100	-	-	-
Motor supplier Siemens		-	-	47000303	-	-	-

Electrical wiring diagram

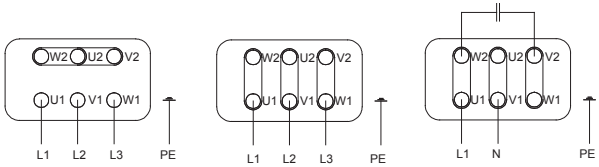

3~ Y-connection 3~ delta connection 1~ Steinmetz connection

Index

A
Alarm 22
Alarm relay 23
Analogue control 22
Approximation initiator 27
Area with a potentially explosive atmosphere 15

B
Bearings 27

C
Cable assignments 23
Chemical leakage 15
Control unit 11

D
Delivery characteristic curves 14
Diaphragm replacement 27
Dimensioned drawings 9
Dosing head 7
Dosing of chemicals 5

E
Electric motor data 12
Explosion-proof 32
Explosion-proof motors 12

F
Factory setting 23
Fault 33
Function 8

I
Injection nozzle 20
Installation 15
Installation example 20
Installation location 16

L
Level input 21
Level monitoring 19
Lubrication 27

M
Maintenance 27
Manual control 22

N
Max. number of strokes 23

O
Oil inlet 7
Oil outlet 7
Selection of operating mode 21
Operation 21

P
Pressure control and safety valves 19
Protective clothing 5
Pulse control 22

R
Revision 26

S
Separate fan 40
Servomotor 13
Shutdown 26
Spare parts 34
Start up 25
Structure of the dosing pump 7
Switching on/off 21

T
Technical data 10
Troubleshooting 33

V
Valves 29

W
Wiring diagram for electronics 23
Wiring diagram for the drive motor 17

Y
Y-connection 17

Declaration of no objection

When sending in for repair, please copy this form, fill in and send along with each device!

Declaration of No Objection - Form

(please fill in one form for each device and attach it to the outside of the device)

We are returning the following device for repair:

Device and device type: .....

Part No.: .....

Order No.: .....

Date of delivery: .....

Reason for repair: .....

Medium conveyed

Description: .....

Properties:.....

Irritant: Yes/No*) Corrosive: Yes/No*)

*) Please delete as appropriate!

We hereby certify that the product has been cleaned thoroughly on the inside and outside before shipment, that it is free from hazardous chemical, biological, or radioactive substances and that the oil has been drained. *)

If the manufacturer finds it necessary to carry out further cleaning work, we will accept the related costs.

We confirm that the above statements are correct and complete and that the device is being shipped according to legal requirements.

Company:.....

Address:.....

.....

.....

Telephone:.....

Fax:.....

E-mail: .....

Customer No.: .....

Contact person: .....

Date, signature, stamp: .....

Warranty claim

Please copy and enclose with the unit.

If the device fails during the warranty period, please clean it and return, accompanied by the completed warranty claim form.

Sender

Company:..... Telephone: ..... Date: .....

Address:.....

Contact person: .....

Manufacturer order No.: ..... Date of delivery: .....

Device type:..... Serial number:.....

Nominal delivery rate:/Nominal pressure:.....

Fault details:.....

Type of fault:

1. Mechanical fault
   - Premature wear
   - Wearing parts
   - Breakage/other damage
   - Corrosion
   - Damage in transit
2. Electrical fault
   - Loose connections such as connectors or cables
   - Controls (e.g. switches / buttons)
   - Electronics
3. Leaks
   - Connections
   - Dosing head
4. No or inadequate operation
   - Diaphragm defective
   - Other

Operating conditions of the device

Application site / site description:.....

Accessories used if any:.....

.....

.....

Setup (date):.....

Runtime (approx. number of operating hours):.....

Please indicate the specific features of the installation and enclose a simple sketch showing materials, diameters, lengths and heights.

EU-Konformitätserklärung
Der Unterzeichnete Lutz-Jesco GmbH, Am Bostelberge 19, 30900 Wedemark, bestätigt, dass die nachfolgend bezeichneten Geräte in der von uns in Verkehr gebrachten Ausführung die Anforderungen der harmonisierten EU-Richtlinien, EU-Sicherheitstandards und produktspezifischen Standards erfüllen. Bei einer nicht mit uns abgestimmten Änderung der Geräte verliert diese Erklärung ihre Gültigkeit.

(EN) EU Certificate of Conformity
The undersigned Lutz-Jesco GmbH, Am Bostelberge 19, 30900 Wedemark. hereby certifies that, when leaving our factory, the units indicated below are in accordance with the harmonised EU guidelines, EU standards of safety and product specific standards. This certificate becomes void if the units are modified without our approval.

(FR) Certificat de conformité aux directives européennes
Le constructeur, soussigné: Lutz-Jesco GmbH, Am Bostelberge 19, 30900 Wedemark, déclare qu'à la sortie de ses usines le matériel neuf désigné ci-dessous était conforme aux prescriptions des directives européennes énoncées ci-après et conforme aux règles de sécurité et autres règles qui lui sont applicables dans le cadre de l'Union européenne. Toute modification portée sur ce produit sans l'accord express de Jesco supprime la validité de ce certificat.

(ES) Declaración de conformidad de la UE
El que subscribe Lutz-Jesco GmbH, Am Bostelberge 19, 30900 Wedemark, declara que la presente mercancía, objeto de la presente declaración, cumple con todas las normas de la UE, en lo que a normas técnicas, de homologación y de seguridad se refiere, En caso de realizar cualquier modificación en la presente mercancía sin nuestra previa autorización, esta declaración pierde su validez.

(NL) EU-overeenstemmingsverklaring
Ondergetekende Lutz-Jesco GmbH, Am Bostelberge 19, 30900 Wedemark, bevestigt, dat het volgende genoemde apparaat in de door ons in de handel gebrachte uitvoering voldoet aan de eis van, en in overeenstemming is met de EU-richtlijnen, de EU-veiligheidsstandaard en de voor het product specifieke standaard. Bij een niet met ons afgestemde verandering aan het apparaat verliest deze verklaring haar geldigheid.

(HU) EG (EK)– Egyezőségi nyilatkozat
A Lutz-Jesco GmbH, Am Bostelberge 19, 30900 Wedemark ezúton kijelenti, hogy a szóban forgó termék annak tervezése és szerkezeti módja, valamint forgalomba hozott kivitele alapján a vonatkozó alapvető biztonság technikai és egészségügyi követelményeknek és az alábbi felsorolt EG –irányelveknek minden szempontból megfelel. A terméken engedélyünk nélkül végrehajtott módosítások következtében jelen nyilatkozat érvényét veszíti.

Bezeichnung des Gerätes:	**Kolben-Dosierpumpe**
Description of the unit:	**Piston Metering Pump**
Désignation du matériel:	**Pompes doseuses à piston**
Descripción de la mercancía:	**Bombas dosificadoras de piston**
Omschrijving van het apparaat:	**Plunjerdoseerpomp**
A termék megnevezése:	**Dugattyús adagolószivattyúk**

Typ / Type / Tipo / Típusjelölés:	EU-Richtlinie / EU directives/ Directives européennes / Normativa UE / EU-richtlijnen / Vonatkozó EG-irányelvek	Harmonisierte Normen / harmonized standards / Normes harmonisées / Estándares acordemente / Toegepaste normeringen / Hatályos normák
FEDOS TK	**2006/95/EG**	**EN ISO 12100-1 : 2003**
FEDOS K	**2006/42/EG**	**EN ISO 12100-2 : 2003**
FEDOS E		**EN 809 : 1998**
REKOS KR		
KARDOS KN		
KARDOS N		

i.V. Dipl. Ing. Klaus Albert
Lutz-Jesco, Wedemark, 01.02.2008

Technische Leitung / Technical Departement Manager / Direction technique / Dirección Técnica / Hoofd technische dienst / Műszaki irodavezető

CE-Kolben_Dosierpumpe-V02

EU-Konformitätserklärung
Der Unterzeichnete Lutz-Jesco GmbH, Am Bostelberge 19, 30900 Wedemark, bestätigt, dass die nachfolgend bezeichneten Geräte in der von uns in Verkehr gebrachten Ausführung die Anforderungen der harmonisierten EU-Richtlinien, EU-Sicherheitstandards und produktspezifischen Standards erfüllen. Bei einer nicht mit uns abgestimmten Änderung der Geräte verliert diese Erklärung ihre Gültigkeit.

(EN) EU Certificate of Conformity
The undersigned Lutz-Jesco GmbH, Am Bostelberge 19, 30900 Wedemark. hereby certifies that, when leaving our factory, the units indicated below are in accordance with the harmonised EU guidelines, EU standards of safety and product specific standards. This certificate becomes void if the units are modified without our approval.

(FR) Certificat de conformité aux directives européennes
Le constructeur, soussigné: Lutz-Jesco GmbH, Am Bostelberge 19, 30900 Wedemark, déclare qu'à la sortie de ses usines le matériel neuf désigné ci-dessous était conforme aux prescriptions des directives européennes énoncées ci-après et conforme aux règles de sécurité et autres règles qui lui sont applicables dans le cadre de l'Union européenne. Toute modification portée sur ce produit sans l'accord express de Jesco supprime la validité de ce certificat.

(ES) Declaración de conformidad de la UE
El que subscribe Lutz-Jesco GmbH, Am Bostelberge 19, 30900 Wedemark, declara que la presente mercancía, objeto de la presente declaración, cumple con todas las normas de la UE, en lo que a normas técnicas, de homologación y de seguridad se refiere, En caso de realizar cualquier modificación en la presente mercancía sin nuestra previa autorización, esta declaración pierde su validez.

(NL) EU-overeenstemmingsverklaring
Ondergetekende Lutz-Jesco GmbH, Am Bostelberge 19, 30900 Wedemark, bevestigt, dat het volgende genoemde apparaat in de door ons in de handel gebrachte uitvoering voldoet aan de eis van, en in overeenstemming is met de EU-richtlijnen, de EU-veiligheidsstandaard en de voor het product specifieke standaard. Bij een niet met ons afgestemde verandering aan het apparaat verliest deze verklaring haar geldigheid.

(HU) EG (EK)– Egyezőségi nyilatkozat
A Lutz-Jesco GmbH, Am Bostelberge 19, 30900 Wedemark ezúton kijelenti, hogy a szóban forgó termék annak tervezése és szerkezeti módja, valamint forgalomba hozott kivitele alapján a vonatkozó alapvető biztonság technikai és egészségügyi követelményeknek és az alábbi felsorolt EG –irányelveknek minden szempontból megfelel. A terméken engedélyünk nélkül végrehajtott módosítások következtében jelen nyilatkozat érvényét veszíti.

Bezeichnung des Gerätes:	**Kolben-Dosierpumpe DX**
Description of the unit:	**Piston Metering Pump DX**
Désignation du matériel:	**Pompes doseuses à piston DX**
Descripción de la mercancía:	**Bombas dosificadoras de piston DX**
Omschrijving van het apparaat:	**Plunjerdoseerpomp DX**
A termék megnevezése:	**Dugattyus adagolószivattyúk DX**

Typ / Type / Tipo / Típusjelölés:	EU-Richtlinie / EU directives/ Directives européennes / Normativa UE / EU-richtlijnen / Vonatkozó EG-irányelvek	Harmonisierte Normen / harmonized standards / Normes harmonisées / Estándares acordemente / Toegepaste normeringen / Hatályos normák
FEDOS DX	**2006/95/EG**	**EN ISO 12100-1 : 2003**
	2006/42/EG	**EN ISO 12100-2 : 2003**
	2004/108/EG	**EN 809 : 1998**
		EN 50081-1 : 01.92
		EN 50081-2 : 08.93
		EN 50082-1 : 01.92
		EN 50082-2 : 03.95

i.V. Dipl. Ing. Klaus Albert
Lutz-Jesco, Wedemark, 01.02.2008

Technische Leitung / Technical Departement Manager / Direction technique / Dirección Técnica / Hoofd technische dienst / Műszaki irodavezető

CE-Kolben_Dosierpumpe-DX-V02

EU-Konformitätserklärung
Der Unterzeichnete Lutz-Jesco GmbH, Am Bostelberge 19, 30900 Wedemark, bestätigt, dass die nachfolgend bezeichneten Geräte in der von uns in Verkehr gebrachten Ausführung die Anforderungen der harmonisierten EU-Richtlinien, EU-Sicherheitstandards und produktspezifischen Standards erfüllen. Bei einer nicht mit uns abgestimmten Änderung der Geräte verliert diese Erklärung ihre Gültigkeit.

(EN) EU Certificate of Conformity
The undersigned Lutz-Jesco GmbH, Am Bostelberge 19, 30900 Wedemark. hereby certifies that, when leaving our factory, the units indicated below are in accordance with the harmonised EU guidelines, EU standards of safety and product specific standards. This certificate becomes void if the units are modified without our approval.

(FR) Certificat de conformité aux directives européennes
Le constructeur, soussigné: Lutz-Jesco GmbH, Am Bostelberge 19, 30900 Wedemark, déclare qu'à la sortie de ses usines le matériel neuf désigné ci-dessous était conforme aux prescriptions des directives européennes énoncées ci-après et conforme aux règles de sécurité et autres règles qui lui sont applicables dans le cadre de l'Union européenne. Toute modification portée sur ce produit sans l'accord express de Jesco supprime la validité de ce certificat.

(ES) Declaración de conformidad de la UE
El que subscribe Lutz-Jesco GmbH, Am Bostelberge 19, 30900 Wedemark, declara que la presente mercancía, objeto de la presente declaración, cumple con todas las normas de la UE, en lo que a normas técnicas, de homologación y de seguridad se refiere, En caso de realizar cualquier modificación en la presente mercancía sin nuestra previa autorización, esta declaración pierde su validez.

(NL) EU-overeenstemmingsverklaring
Ondergetekende Lutz-Jesco GmbH, Am Bostelberge 19, 30900 Wedemark, bevestigt, dat het volgende genoemde apparaat in de door ons in de handel gebrachte uitvoering voldoet aan de eis van, en in overeenstemming is met de EU-richtlijnen, de EU-veiligheidsstandaard en de voor het product specifieke standaard. Bij een niet met ons afgestemde verandering aan het apparaat verliest deze verklaring haar geldigheid.

(HU) EG (EK)– Egyezőségi nyilatkozat
A Lutz-Jesco GmbH, Am Bostelberge 19, 30900 Wedemark ezúton kijelenti, hogy a szóban forgó termék annak tervezése és szerkezeti módja, valamint forgalomba hozott kivitele alapján a vonatkozó alapvető biztonság technikai és egészségügyi követelményeknek és az alábbi felsorolt EG –irányelveknek minden szempontból megfelel. A terméken engedélyünk nélkül végrehajtott módosítások következtében jelen nyilatkozat érvényét veszíti.

Bezeichnung des Gerätes:	**Explosionsgeschützte Kolben-Dosierpumpe**
Description of the unit:	**Explosion proofed Piston Metering Pump**
Désignation du matériel:	**Pompes doseuses à piston EX**
Descripción de la mercancía:	**Bombas dosificadoras de piston EX**
Omschrijving van het apparaat:	**Explosieveilige Membraandoseerpomp EX**
A termék megnevezése:	**Dugattyus adagolószivattyúk robbanásbiztos kivitelben EX**

Typ / Type / Tipo / Típusjelölés:	EU-Richtlinie / EU directives/ Directives européennes / Normativa UE / EU-richtlijnen / Vonatkozó EG-irányelvek	Harmonisierte Normen / harmonized standards / Normes harmonisées / Estándares acordemente / Toegepaste normeringen / Hatályos normák
Fedos E - EX	**2006/95/EG**	**EN ISO 12100-1 : 2003**
	2006/42/EG	**EN ISO 12100-2 : 2003**
	94/9/EG	**EN 809 : 1998**
		EN 13463-1 : 2001

ATEX-Registrier-Nr. :
Fedos E: Ex II 2 G c k T4 04 ATEX D041

i.V. Dipl. Ing. Klaus Albert
Lutz-Jesco, Wedemark, 01.02.2008

Technische Leitung / Technical Departement Manager / Direction technique / Dirección Técnica / Hoofd technische dienst / Műszaki irodavezető

CE-Kolben_Dosierpumpe-Ex-V02

Notes