Stepper motor-driven diaphragm dosing pump

MEMDOS SMART LB / LD

Operating instructions

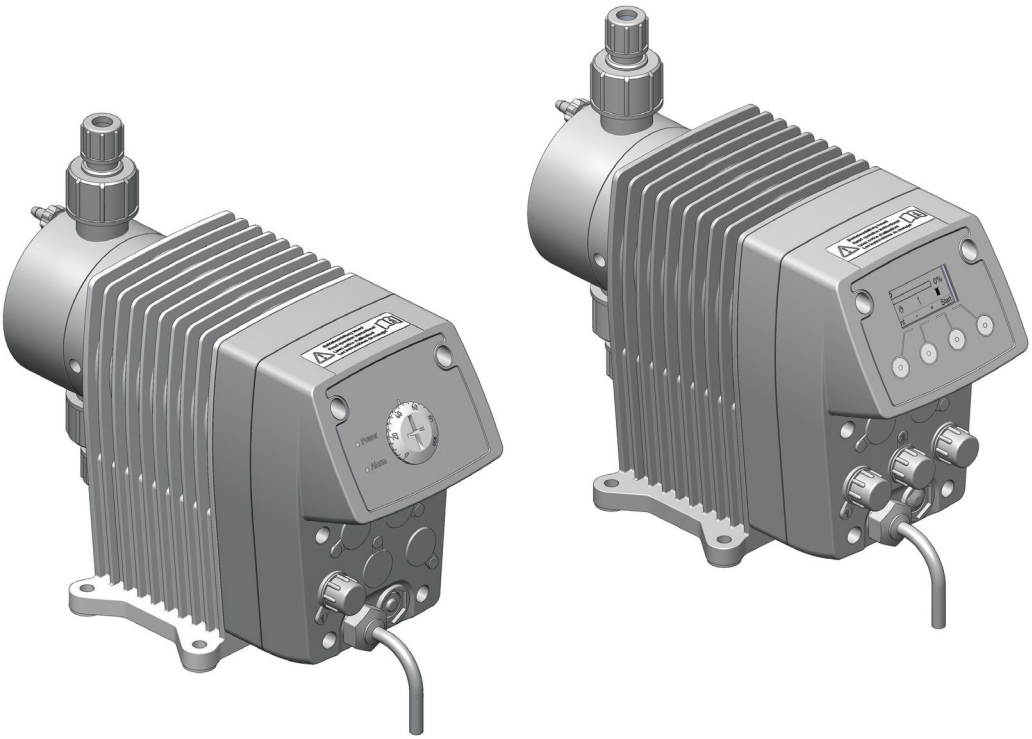

Read the operating manual!

The user is responsible for installation and operation related mistakes!

Original operating instructions

© Lutz-Jesco GmbH 2020

BA-10110-02-V03

Dosing Conveying Control | Liquids Gases Systems

Table of Contents

1 Notes for the Reader 4
1.1 General non-discrimination 4
1.2 Explanation of the signal words 4
1.3 Explanation of the warning signs 4
1.4 Identification of warnings 4
1.5 Instruction for action identification 4

2 Safety 5
2.1 General warnings 5
2.2 Hazards due to non-compliance with the safety instructions 6
2.3 Working in a safety-conscious manner 6
2.4 Personal protective equipment 6
2.5 Personnel qualification 6

3 Intended use 8
3.1 Notes on product warranty 8
3.2 Intended purpose 8
3.3 Device revision 8
3.4 Principles 8
3.5 Prohibited dosing media 8
3.6 Foreseeable misuse 8

4 Product description 10
4.1 Properties 10
4.2 Scope of delivery 10
4.3 Structure of the dosing pump 10
4.4 Function description 11
4.5 Rating plate 11
4.6 Conveying characteristics 12

5 Technical data 13
5.1 Delivery capacity data 13
5.2 Operating conditions and limits 13
5.3 Electrical specifications 14
5.4 Other data 14

6 Dimensions 15
6.1 MEMDOS SMART LB / LD 2, 5, 10 15
6.2 MEMDOS SMART LB / LD 15, 20, 30 16

7 Installing the Dosing Pump 17
7.1 Set up information 17
7.2 Installation examples 17

8 Hydraulic installations 18
8.1 Design of the system 18
8.2 System piping 19
8.3 Aligning the dosing head 19
8.4 Hydraulic connections 19
8.5 Connecting a leakage drain 21
8.6 Connecting the dosing head venting facility 21
8.7 Hydraulic accessories 21

9 Electrical installation 24
9.1 Principles 24
9.2 Description of connection sockets 25

10 Control 27
10.1 Operating elements of the control LB 27
10.2 Operating elements of the control LD 27
10.3 Password protection 28

11 Operation 30
11.1 Commissioning the dosing pump 30
11.2 MEMDOS SMART LD: Operating modes 31
11.3 External On / Off via Release input 33
11.4 Decommissioning the dosing pump 33
11.5 Shutting down in an emergency 33
11.6 Storage 33
11.7 Transportation 33
11.8 Disposal of old equipment 33

12 Maintenance 34
12.1 Maintenance intervals 34
12.2 Tighten up dosing head bolts 34
12.3 Change the diaphragm 35
12.4 Clean suction and discharge valves 35

13 Troubleshooting 36
13.1 Type of fault 36

14 Spare parts 39
14.1 Diaphragm spare parts kits 39
14.2 Dosing head spare parts kits including valves 39

15 Delivery characteristic curves 40

16 EC Declaration of Conformity 41

17 Declaration of no objection 42

18 Warranty claim 43

19 Index 44

© Lutz-Jesco GmbH 2020
Subject to technical changes.
201218

1 Notes for the Reader

These Operating instructions contain information and behaviour rules for safe and designated operation of the dosing pump MEMDOS SMART LB / LD.

Observe the following principles:

- Read the entire operating manual prior to starting-up the device.
- Ensure that everyone who works with or on the dosing pump has read the operating instructions and follows them.
- Keep the operating instructions for the entire service life of the dosing pump.
- Pass on the operating instructions to any subsequent owner of the dosing pump.

1.1 General non-discrimination

In this operating manual, only the male gender is used where grammar allows gender allocation. The purpose of this is to make the text easy to read. Men and women are always referred to equally. We would like to ask female readers for understanding of this text simplification.

1.2 Explanation of the signal words

Different signal words in combination with warning signs are used in this operating manual. Signal words illustrate the gravity of possible injuries if the risk is ignored:

Signal word	Meaning
DANGER	Refers to imminent danger. Ignoring this sign may lead to death or the most serious injuries.
WARNING	Refers to a potentially hazardous situation. Failure to follow this instruction may lead to death or severe injuries.
CAUTION	Refers to a potentially hazardous situation. Failure to follow this instruction may lead to minor injury or damage to property.
NOTE	Refers to a danger which, if ignored, may lead to risk to the machine and its function.

Table 1: Explanation of the signal words

1.3 Explanation of the warning signs

Warning signs represent the type and source of a danger:

Warning sign	Type of danger
	Danger point
	Danger from electrical voltage
	Danger from corrosive substances
	Danger from potentially-explosive substances
	Danger from automatic startup
	Danger of damage to machine or functional influences

Table 2: Explanation of the warning signs

1.4 Identification of warnings

Warnings are intended to help you recognise risks and avoid negative consequences.

This is how warnings are identified:

Warning sign	SIGNAL WORD
Description of danger. Consequences if ignored. ⇨ The arrow signals a safety precaution to be taken to eliminate the danger.	

1.5 Instruction for action identification

This is how pre-conditions for action are identified:

✓ Pre-condition for action which must be met before taking action.

🛠 A resource such as a tool or auxiliary materials required to perform the operating instructions.

This is how instructions for action are identified:

➔ Separate step with no follow-up action.

1. First step in a series of steps.

2. Second step in a series of steps.

▶ Result of the above action.

✓ **Action completed, aim achieved.**

© Lutz-Jesco GmbH 2020

2 Safety

2.1 General warnings

The following warnings are intended to help you to eliminate the dangers that can arise while handling the dosing pump. Risk prevention measures always apply regardless of any specific action.

Safety instructions warning against risks arising from specific activities or situations can be found in the respective sub-chapters.

DANGER

Mortal danger from electric shock!

Wrongly connected or located cables or damaged ones can injure you.

- ⇨ Connect the device only to a SCHUKO socket outlet protected by a ground fault circuit interrupter (GFCI).
- ⇨ Replace damaged cables without delay.
- ⇨ Do not use extension cables.
- ⇨ Do not bury cables.
- ⇨ Secure cables to avoid being damaged by other equipment.

DANGER

Danger to life through explosions!

The use of dosing pumps without ATEX certification in a potentially explosive atmospheres can result in potentially-fatal explosions.

- ⇨ Never use the dosing pump in potentially explosive areas.

WARNING

Danger from unsuitable materials

The materials of the dosing pump and hydraulic parts of the system must be suitable for the dosing medium that is used. Should this not be the case, the dosing media may leak.

- ⇨ Make sure that the materials you are using are suitable for the dosing medium.
- ⇨ Make sure that the lubricants, adhesives, sealants, etc. that you use are suitable for the dosing medium.

WARNING

Caustic burns or other burns through dosing media!

While working on the dosing head, valves and connections, you may come into contact with dosing media.

- ⇨ Use sufficient personal protective equipment.
- ⇨ Rinse the dosing pump with a liquid (e.g. water) which does not pose any risk. Ensure that the liquid is compatible with the dosing medium.
- ⇨ Release pressure in hydraulic parts.
- ⇨ Never look into open ends of plugged pipelines and valves.

WARNING

Danger of automatic start up!

After connecting the mains supply, residual dosing media in the dosing head can spray out.

- ⇨ Before connecting the mains supply, connect the dosing lines.
- ⇨ Check that all the screw connections have been tightened correctly and are leak-proof.

CAUTION

Danger when changing the dosing medium.

Changing the dosing media can provoke unexpected reactions, damage to property and injury.

- ⇨ Clean the dosing pump and the system parts in contact with the media thoroughly before changing the dosing medium.

CAUTION

Increased risk of accidents due to insufficient qualification of personnel!

Dosing pumps and their accessories may only be installed, operated and maintained by personnel with sufficient qualifications. Insufficient qualification will increase the risk of accidents.

- ⇨ Ensure that all action is taken only by personnel with sufficient and corresponding qualifications.
- ⇨ Prevent access to the system for unauthorised persons.

© Lutz-Jesco GmbH 2020
Subject to technical changes.
201218

2.2 Hazards due to non-compliance with the safety instructions

Failure to follow the safety instructions may endanger not only persons, but also the environment and the device.

The specific consequences can be:

- failure of vital functions of the dosing pump and the system,
- failure of required maintenance and repair methods,
- danger for individuals through dangerous dosing media,
- danger to the environment caused by substances leaking from the system.

2.3 Working in a safety-conscious manner

Besides the safety instructions specified in this operating manual, further safety rules apply and must be followed:

- accident prevention regulations,
- safety and operating provisions,
- safety provisions for handling dangerous substances (mostly the safety data sheets to dosing media),
- environmental protection provisions,
- applicable standards and legislation.

2.4 Personal protective equipment

Based on the degree of risk posed by the dosing medium and the type of work you are carrying out, you must use corresponding protective equipment. Read the Accident Prevention Regulations and the Safety Data Sheets to the dosing media find out what protective equipment you need.

You will require the minimum of the following personal protective equipment:

Personal protective equipment required	
	Protective goggles
	Protective clothing
	Protective gloves

Table 3: Personal protective equipment required

Wear the following personal protective equipment when performing the following tasks:

- commissioning,
- working on the dosing pump while running,
- shutdown,
- maintenance work,
- disposal.

2.5 Personnel qualification

Any personnel who work on the dosing pump must have appropriate special knowledge and skills.

Anybody who works on the dosing pump must meet the conditions below:

- attendance at all the training courses offered by the owner,
- personal suitability for the respective activity,
- sufficient qualification for the respective activity,
- training in handling of the dosing pump,
- knowledge of safety equipment and the way this equipment functions,
- knowledge of this operating manual, particularly of safety instructions and sections relevant for the activity,
- knowledge of fundamental regulations regarding health and safety and accident prevention.

All persons must generally have the following minimum qualification:

- training as specialists to carry out work on the dosing pump unsupervised,
- sufficient training that they can work on the dosing pump under the supervision and guidance of a trained specialist.

© Lutz-Jesco GmbH 2020

These operating instructions differentiate between these user groups:

2.5.1 Specialist staff

Thanks to their professional training, knowledge, experience and knowledge of the relevant specifications, specialist staff are able to perform the job allocated to them and recognise and/or eliminate any possible dangers by themselves.

2.5.2 Trained persons

Trained persons have received training from the operator about the tasks they are to perform and about the dangers stemming from improper behaviour.

In the table below you can check what qualifications are the pre-condition for the respective tasks. Only people with appropriate qualifications are allowed to perform these tasks!

Qualification	Activities
Specialist staff	■ Assembly ■ Hydraulic installations ■ Electrical installation ■ Maintenance ■ Repairs ■ Commissioning ■ Taking out of operation ■ Disposal ■ Fault rectification
Trained persons	■ Storage ■ Transportation ■ Control ■ Fault rectification

Table 4: Personnel qualification

© Lutz-Jesco GmbH 2020
Subject to technical changes.
201218

3 Intended use

3.1 Notes on product warranty

Any non-designated use of the product can compromise its function or intended protection. This leads to invalidation of any warranty claims!

Please note that liability is on the side of the user in the following cases:

- The dosing pump is operated in a manner which is not consistent with these operating instructions, particularly the safety and handling instructions and the chapter 3 „Intended use“ on page 8.
- If people operate the product who are not adequately qualified to carry out their respective activities.
- No original spare parts or accessories of Lutz-Jesco GmbH are used.
- Unauthorised changes are made to the device by the user.
- The user uses different dosing media than those indicated in the order.
- The user does not use dosing media under the conditions agreed with the manufacturer such as modified concentration, density, temperature, contamination, etc.

3.2 Intended purpose

The dosing pump MEMDOS SMART LB / LD is intended for the following purpose: the conveying and dosing of liquids.

3.3 Device revision

This operating manual applies to the following devices:

Device	Month / year of manufacture	Firmware
MEMDOS SMART LB	08/2016 onwards	
MEMDOS SMART LD	08/2016 onwards	From 01:59

Table 5: Device revision

3.4 Principles

- Before delivery, the manufacturer inspected the dosing pump and operated it under specific conditions (with a specific dosing medium with a specific density and temperature, with specific pipe dimensions, etc.) Since these conditions differ at every location of usage, the delivery capacity of the dosing pump should be measured by gauging it at the operating company's installation. For details on the approximate values and the capacity of the dosing pump, refer to the chapter 15 „Delivery characteristic curves“ on page 40.
- Comply with the information regarding the operating and environmental conditions (see chapter 5 „Technical data“ on page 13).
- Any restrictions regarding the viscosity, temperature and density of dosing media must be followed. You must only use dosing media at temperatures above freezing point or below the boiling point of the respective medium.
- The materials of the dosing pump and hydraulic parts of the system must be suitable for the dosing medium that is used. In this connection, note that the resistance of these components can change in dependence on the temperature of the media and the operating pressure.

> Information on the suitability of materials combined with different dosing media can be found in the Compatibility Chart of Lutz-Jesco GmbH.
> The information in this resistance list is based on information from the material manufacturers and on expertise obtained by Lutz-Jesco from handling the materials.
> As the durability of the materials depends on many factors, this list only constitutes initial guidance on selecting material. In all cases, test the equipment with the chemicals you use under operating conditions.

- The dosing pump is not intended for outdoor use unless appropriate protective measures have been taken.
- Avoid leaks of liquids and dust into the casing and avoid direct exposure to sunlight.
- You must never operate dosing pumps in a potentially explosive atmosphere if they do not have corresponding nameplates or an appropriate EU Declaration of Conformity for potentially explosive atmospheres.

3.5 Prohibited dosing media

The dosing pump must not be used for these media and substances:

- Gaseous media,
- radioactive media,
- solid substances,
- combustible media,
- all other media that are not suitable for delivery using this dosing pump.

3.6 Foreseeable misuse

Below, there is information about the applications of the dosing pump or associated equipment that are not considered to be intended use. This section is intended to allow you to detect possible misuse in advance and to avoid it.

© Lutz-Jesco GmbH 2020

Foreseeable misuse is assigned to the individual stages of the product lifetime:

3.6.1 Incorrt assembly

- Unstable or unsuitable bracket
- Dosing pump bolted wrongly or loosely

3.6.2 Incorrect hydraulic installation

- Suction and pressure lines dimensioned incorrectly
- Unsuitable connection of the pipes due to wrong material or unsuitable connections.
- Suction and pressure lines mixed-up
- Damage to threads due to them being tightened too much
- Bending of pipelines
- No free return flow of the pressure relief valve
- Excessive demand due to the pressure differences between the suction and discharge valves
- Through-suction at installation without back-pressure valves
- Damage due to undamped acceleration mass forces
- Exceeding the admissible pressure on the suction and discharge sides
- Using damaged parts

3.6.3 Incorrect electrical installation

- Connecting the mains voltage without a protective earth
- Unsecured mains or one that does not conform to standards
- Not possible to immediately or easily disconnect the power supply
- Wrong connecting cables for mains voltage
- Dosing pump accessories connected to wrong sockets
- Diaphragm monitoring not connected or defective
- Protective earth removed

3.6.4 Incorrect start-up

- Start-up with damaged system
- Shut-off valves closed at commissioning
- Closed suction or pressure line, e.g. due to blockages
- Personnel was not informed before the start-up
- System was recommissioned after maintenance without all the protective equipment and fixtures, etc. being reconnected
- Inadequate protective clothing or none at all

3.6.5 Incorrect operation

- Protective equipment not functioning correctly or dismantled
- Modification of the dosing pump without authority
- Ignoring operational disturbances
- Elimination of operational disturbances by personnel without adequate qualifications
- Deposits in the dosing head due to inadequate purging, particularly with suspensions
- Bridging the external fuse
- Operation made more difficult due to inadequate lighting or machines that are difficult to access
- Operation not possible due to dirty or illegible display of the dosing pump
- Delivery of dosing media for which the system is not designed
- Delivery of particulate or contaminated dosing media
- Inadequate protective clothing or none at all

3.6.6 Incorrect maintenance

- Carrying out maintenance during ongoing operation
- Carrying out work that is not described in the operating manual
- No adequate or regular inspection of correct functioning
- No replacement of damaged parts or cables with inadequate insulation
- No securing against reactivation during maintenance work
- Using cleaning materials that can cause reactions with the dosing media
- Inadequate cleaning of the system
- Unsuitable purging medium
- Unsuitable cleaning materials
- Detergents left in system parts
- Using unsuitable cleaning equipment
- Using the wrong spares or lubricants
- Contaminating the dosing medium with lubricant
- Installing spare parts without following the instructions in the operating manual
- Blocking venting orifices
- Pulling off sections of the plant
- Contamination at installation without a dirt trap
- Mixing up the valves
- Mixing up the sensor lines
- Not reconnecting all the lines
- Damaging or not installing all the seals
- Not renewing seals
- Not paying attention to safety data sheets
- Inadequate protective clothing or none at all

3.6.7 Incorrect decommissioning

- Not completely removing the dosing medium
- Dismantling lines while the dosing pump is running
- Device not disconnected from the power supply
- Using the wrong dismantling tools
- Inadequate protective clothing or none at all

3.6.8 Incorrect disposal

- Incorrect disposal of dosing media, operating resources and other materials
- No labelling of hazardous substances

© Lutz-Jesco GmbH 2020
Subject to technical changes.
201218

4 Product description

4.1 Properties

The MEMDOS SMART is a stepper motor-driven diaphragm dosing pump that is used when precise dosing results are required.

They are characterized by the following properties:

- Output range from 2 – 30 l/h, up to 20 bar
- Power supply 110—240 V, 50/60 Hz, IP65, 25 W
- Microprocessor-controlled drive
- Integrated dosing head ventilation (only MEMDOS SMART LB / LD 2, LB / LD 5 and LB / LD 10 with plastic dosing head)
- Suitable for wall and floor mounting
- Material finishes PVC, PP, PVDF and stainless steel
- Release input for external start/stop

Also with MEMDOS SMART LD:

- Pulse input (increase and reduction)
- Level input with early warning and main alarm
- Stroke frequency can be precisely adjusted via the keyboard
- Graphic display
- Calculation wizard for pulse operation available online

4.2 Scope of delivery

Please compare the delivery note with the scope of delivery. The following items are part of the scope of delivery:

- Dosing pump MEMDOS SMART LB / LD,
- One set each of hose clamping connections for the suction and discharge sides for hoses with diameters of 4/6 mm, 6/9 mm and 6/12 mm (made of PVC, PP and PVDF),
- Covering caps electrical connections:
  1 for MEMDOS SMART LB
  3 for MEMDOS SMART LD,
- Conductive rubber band for electrical contacts:
  1 for MEMDOS SMART LB (in connection port 1)
  2 for MEMDOS SMART LD (in connection ports 1 and 3),
- Mains cable,
- Operating instructions,
- Inspection report and test certificate (optional),
- Accessory kit (optional),

4.3 Structure of the dosing pump

4.3.1 General Overview

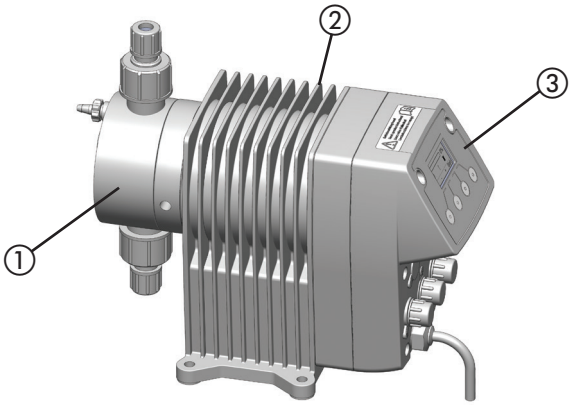

Fig. 1: General Overview

No.	Description
1	Dosing head
2	Drive unit
3	Control box

Table 6: General Overview

4.3.2 Dosing head

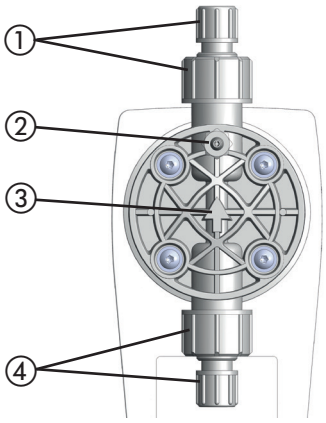

Fig. 2: Dosing head

No.	Description
1	Valve and connection on the discharge side
2	Integrated dosing head ventilation (only MEMDOS SMART LB / LD 2, LB / LD 5 and LB / LD 10 with plastic dosing head)
3	Arrow indicating the direction of throughflow of the dosing medium (plastic version only)
4	Valve and connection on the suction side

Table 7: Dosing head

© Lutz-Jesco GmbH 2020

4.3.3 Control element of the LB

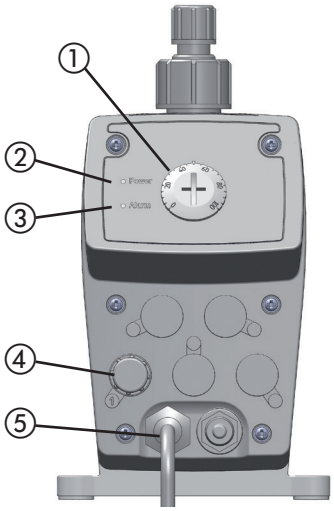

Fig. 3: Dosing pump control MEMDOS SMART LB

No.	Description
1	Stroke frequency setting
2	Power LED
3	Alarm LED
4	Release input for external start/stop
5	Mains cable for power supply

Table 8: Designation of components

4.3.4 Control element of the LD

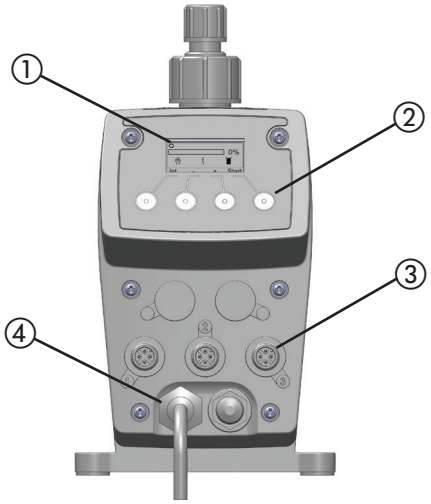

Fig. 4: Dosing pump control MEMDOS SMART LD

No.	Description
1	Graphic display
2	Multifunction keys on the contol unit for operator inputs
3	Connection ports for external operation
4	Mains cable for power supply

Table 9: Designation of components

4.4 Function description

Dosing pumps are positive displacement pumps. They are used if precisely defined delivery of a medium is necessary. A constant volume per stroke or time is delivered.

The system delivers or meters the dosing medium by means of a repeated sequence of suction strokes followed by pressure strokes. This results in a pulsing flow.

If the dosing pump is in the suction stroke phase, the diaphragm is pulled into the rear final position. Due to the resulting vacuum in the dosing head, the discharge valve closes, the suction valve opens and dosing medium flows from the suction line into the dosing head.

If the dosing pump is in the pressure stroke phase, the diaphragm is moved into the front final position. Due to the pressure in the dosing head, the suction valve closes and the dosing medium flows through the discharge valve from the dosing head into the pressurised pipe.

4.5 Rating plate

There is information on the equipment about safety or the product's way of functioning. The information must stay legible for the duration of the service life of the product.

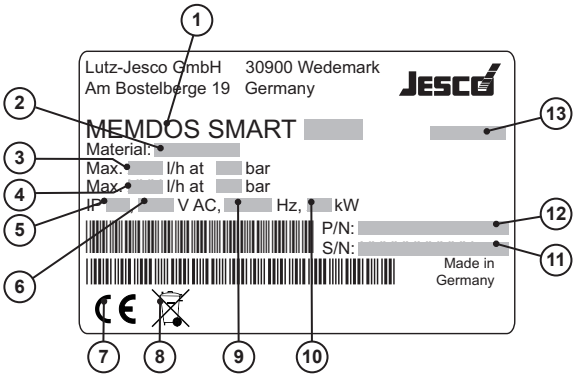

Fig. 5: Rating plate MEMDOS SMART LB / LD

No.	Description
1	Product, type, nominal size
2	Material of the dosing head / seals
3	Maximum delivery capacity at average pressure
4	Maximum delivery capacity at maximum pressure
5	Protection class
6	Voltage supply
7	Label showing conformity with applicable European directives
8	WEEE label
9	Frequency
10	Power consumption
11	Serial number
12	Part number
13	Month / year of manufacture

Table 10: Rating plate

© Lutz-Jesco GmbH 2020
Subject to technical changes.
201218

4.6 Conveying characteristics

The design of the dosing pump enables it to perform the pressure and suction stroke at different speeds. For low supply rates, for example, the dosing pump performs the suction stroke at the maximum speed and adjusts the speed of the pressure stroke to match the desired supply rate. This produces a constant supply stream, which gives you a low-pulsation, smooth dosing.

Settings

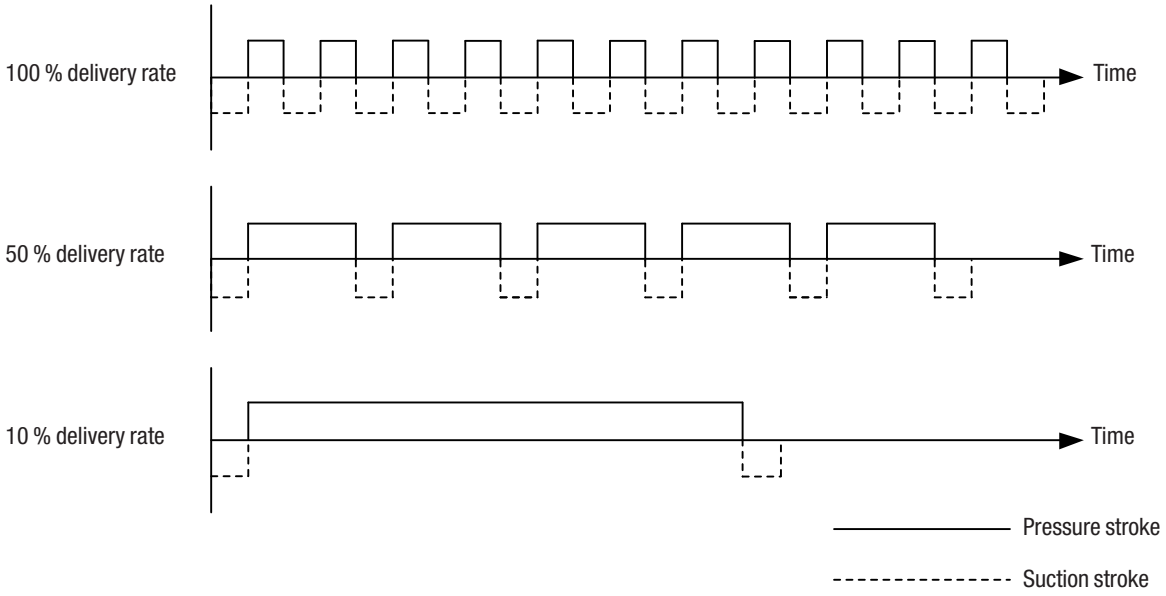

Fig. 6: Selecting available dosing programs

© Lutz-Jesco GmbH 2020

5 Technical data

5.1 Delivery capacity data

Please note that some of this data only represents guide values. The actual capacity of a dosing pump depends on various factors. For approximate values of the delivery capacity at different pressures, refer to chapter 15 „Delivery characteristic curves“ on page 40.

Information	Unit		MEMDOS SMART LB / LD Size				
		2	5	10	15	20	30
Delivery capacity at max. backpressure	l/h	2.4	5.1	10.7	13.7	20.4	30.7
	ml/stroke	0.22	0.57	1.19	1.52	2.27	3.41
Max. delivery pressure	bar	20 (16*)	16	10	6	5	3
Delivery capacity at average backpressure	l/h	2.6	5.7	11.3	14.4	21.2	31
	ml/stroke	0.28	0.63	1.26	1.60	2.36	3.44
Average delivery pressure	bar	10	8	5	3	2.5	1.5
Max. stroke frequency	min-1	150					
Suction lift for non-gassing media	mWS	3					

Table 11: Output data

* with a PVC design.

5.2 Operating conditions and limits

Information	Unit	MEMDOS SMART LB / LD Size
		2 – 30
Approved ambient temperature	°C	5 – 45 (with PVC components 5 – 40)*
Relative humidity	%	max. 90
Max. sound pressure level	dB(A)	51 – 56
Max. supply pressure	mbar	800
Viscosity limits	mPa·s	300** / 1000***
Adjustable dosing range	%	0 – 100

Table 12: Operating conditions and limits

* Use of the dosing pump at ambient temperatures below 5 °C must be checked individually. In such cases, please contact the manufacturer.

** With a viscosity of ~300 mPa·s and above, you must use spring-loaded valves.

*** If the viscosity of the medium is larger than 1000 mPa·s, the use of the dosing pump must be checked individually. In such cases, please contact the manufacturer.

© Lutz-Jesco GmbH 2020
Subject to technical changes.
201218

5.2.1 Approved media temperature

Information	Unit	MEMDOS SMART LB / LD (all sizes)
Dosing head made of PVC	°C	0 – 35
Dosing head made of PP	°C	0 – 60
Dosing head made of PVDF	°C	0 – 60
Dosing head made of stainless steel (1.4571)	°C	0 – 80

Table 13: Approved media temperature

5.3 Electrical specifications

Information	Unit	MEMDOS SMART LB / LD (all sizes)
Voltage supply		110 – 240 V AC, -10% / +5%, 50/60 Hz
Power consumption	W	25

Table 14: Electrical specifications

5.4 Other data

Information	Unit	MEMDOS SMART LB / LD Size					
		2	5	10	15	20	30
Weight (with dosing head made of PVC, PP, PVDF)	kg	2.2 approx.					
Weight (with dosing head made of stainless steel (1.4571))	kg	3.3 approx.					
Diameter of diaphragm	mm	33	39		54		
Electrical cable	m	1.8 m (with mains plug)					
Protection class		IP65 (with covering caps on the connections)					
Insulation class		F					
Valve connection		G5/8 male					
Valve size		DN3	DN4				

Table 15: Other data

© Lutz-Jesco GmbH 2020

6 Dimensions

6.1 MEMDOS SMART LB / LD 2, 5, 10

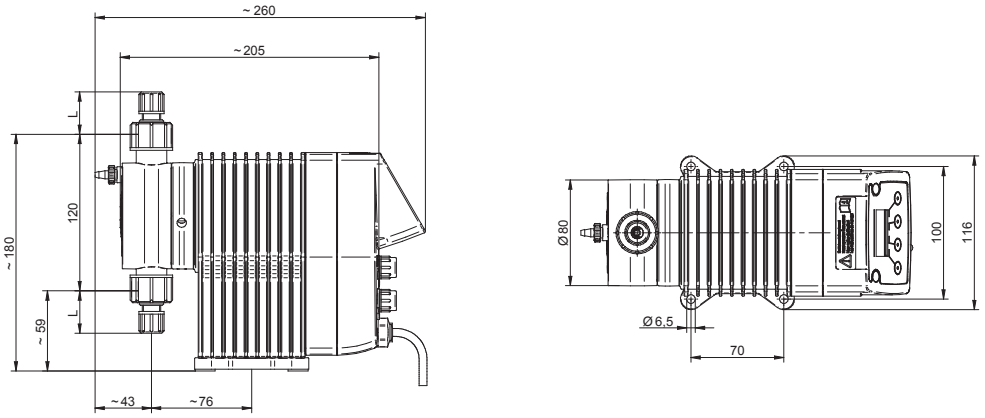

Fig. 7: Dimensioned drawing of MEMDOS SMART LB / LD 2, 5, 10 with dosing head made of PVC, PP or PVDF (all dimensions in mm)

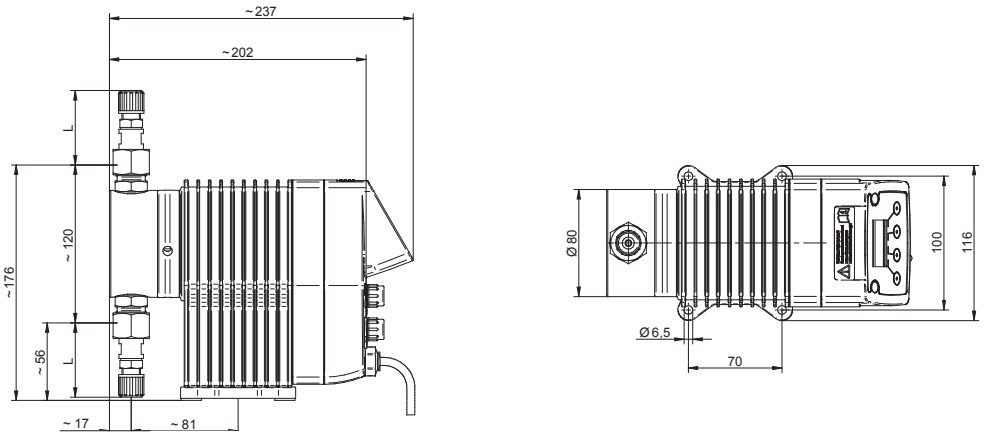

Fig. 8: Dimensioned drawing of MEMDOS SMART LB / LD 2, 5, 10 with dosing head made of stainless steel (1.4571) (all dimensions in mm)

Hose clamp connector	Material	Scale	Nominal width	L
LB / LD 2	PVC / PP / PVDF	4/6 mm	DN4	31
	Stainless steel	4/6 mm	DN4	50
LB / LD 5, 10	PVC / PP / PVDF	4/6 mm	DN4	31
		1/4x3/8"	1/4"	13
		6/9 mm	DN6	34
		6/12 mm	DN6	13
	Stainless steel (1.4571) / PVDF	4/6 mm	DN4	50
		6/9 mm	DN6	54

© Lutz-Jesco GmbH 2020
Subject to technical changes.
201218

6.2 MEMDOS SMART LB / LD 15, 20, 30

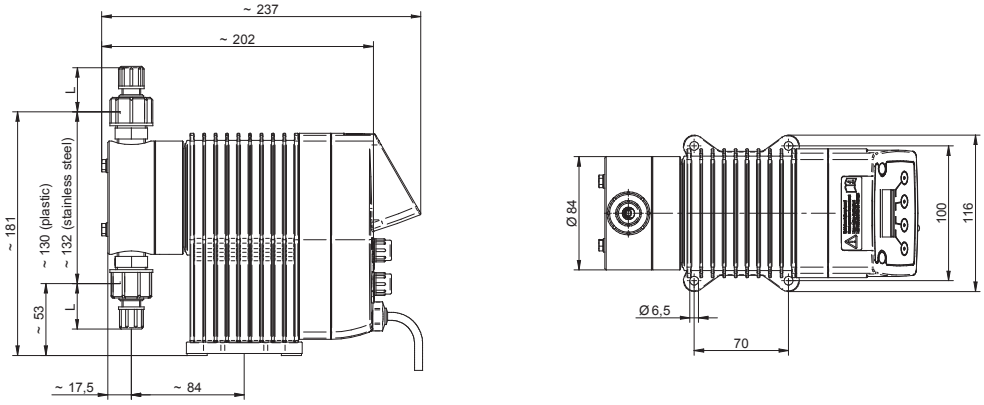

Fig. 9: Dimensioned drawing of MEMDOS SMART LB / LD 15, 20, 30 with dosing head made of PVC, PP, PVDF or stainless steel (1.4571) (all dimensions in mm)

Hose clamp connector	Material	Scale	Nominal width	L
LB / LD 15, 20, 30	PVC / PP / PVDF	4/6 mm	DN4	31
		1/4x3/8"	1/4"	13
		6/9 mm	DN6	34
		6/12 mm	DN6	13
	Stainless steel (1.4571) / PVDF	4/6 mm	DN4	50
		6/9 mm	DN6	54

© Lutz-Jesco GmbH 2020

7 Installing the Dosing Pump

DANGER

Mortal danger from electric shock!

Electrically conductive liquid can enter pump housings, cable screw connections and mains connectors.

⇨ Make sure that all protective measures comply at least with the requirements of protection class IP65.

⇨ Always set up the dosing pump such that water cannot enter the housing.

CAUTION

Danger of personal injury and material damage!

A dosing pump that is difficult to access represents a danger due to incorrect operation and faulty maintenance.

⇨ Install the dosing pump such that it is accessible at all times. Especially the oil level glass, the oil inlet and the oil drain.

7.1 Set up information

When installing, follow the basic principles below:

- The valves must be vertical: Discharge valve at top, suction valve at bottom. in this connection, pay attention to the arrow on the dosing head. The dosing head must be aligned such that the arrow points vertically upwards.
- You should install the dosing pump at a convenient height for operation.
- It must not be installed under the ceiling.
- The frame of foundation for fixing the dosing pump must not be subjected to jolts. The pump must be vibration-free and stable.
- There must be enough free space in the area of the dosing head and the suction and discharge valves for these parts to be easily dismantled if required. The entire space requirement for installation and maintenance is approximately 1 m².
- The distance from the sides of the dosing pump to the wall or other dosing pumps or equipment must be at least 3 cm. There must be a guaranteed flow of circulating air.
- The maximum ambient temperature must be complied with, see chapter 5.2 „Operating conditions and limits“ on page 13. If necessary, radiant heat from surrounding equipment must be screened.
- Avoid exposure to direct sunlight.
- The dosing pump is not intended for use out of doors unless appropriate protective measures have been taken to prevent dust and water from entering the housing.
- For the dimensions of the fastening holes, refer to chapter 6 „Dimensions“ on page 15.
- The tightening torque for the fastening bolts is 1.5 – 2 Nm.

7.2 Installation examples

7.2.1 Installation on a wall console

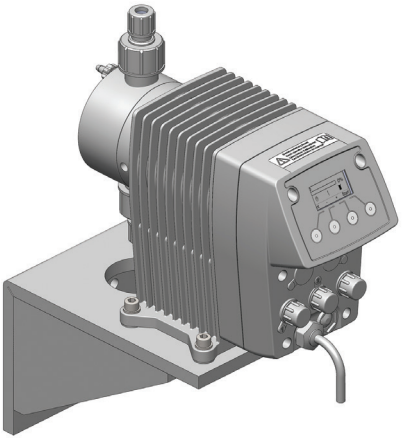

Fig. 10: Installation on a wall console

To reduce the structure-borne noise, the dosing pump is bolted to the wall bracket using rubber elements. The materials necessary for this are included with the wall bracket.

7.2.2 Installation on the wall

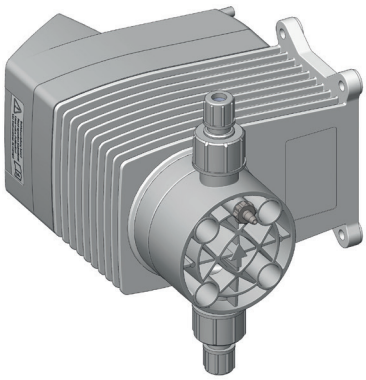

Fig. 11: Installation on the wall

The dosing pump can be mounted to the floor or directly to the wall without the need for additional elements. Turn the dosing head appropriately to ensure the flow direction of the medium through the dosing head.

© Lutz-Jesco GmbH 2020
Subject to technical changes.
201218

8 Hydraulic installations

In this chapter, you will find information about the hydraulic parts of a system that you should install or that can install additionally. In many cases, you must install hydraulic accessories to be able to use all the functions that the dosing pump offers, to guarantee functional safety or to achieve a high level of dosing precision.

WARNING

Caustic burns or other burns through dosing media!

A diaphragm rupture, blocked pressure lines or the use of material not suitable for the dosing medium can result in the discharge of dosing medium. Depending on the type and hazardousness of the dosing medium, this can result in injury.

- ⇨ Wear the recommended personal protective equipment.
- ⇨ Make sure that the materials you are using are suitable for the dosing medium.
- ⇨ Make sure that the lubricants, adhesives, sealants, etc. that you use are suitable for the dosing medium.
- ⇨ Install a leakage drain.
- ⇨ Install pressure relief valves.

CAUTION

Danger of personal injury and material damage!

High peak pressures can lead to piping vibrating and cause them to snap. This can result in injury from piping or escaping dosing media.

- ⇨ Install pulsation dampeners.

NOTE

Damage to drives due to overloading

The pressure conditions between the suction and discharge sides must be balanced; otherwise, overloading can result. This can lead to uncontrolled dosing processes, damage to the piping and to the dosing pump.

- ⇨ Ensure that the pressure on the discharge side is at least 1 bar than on the suction side.

NOTE

Locking of threads

Stainless steel and plastic parts (particularly those made of PVC) that are bolted together in a detachable connection (e.g. the dosing head and the valves) can lock. This makes them difficult to release.

- ⇨ Before bolting, grease the corresponding parts with a lubricant (e.g. PTFE spray). Ensure that the lubricant is compatible with the dosing medium.

8.1 Design of the system

- The dosing pumps technical data (see chapter 5 „Technical data“ on page 13) must be taken into account and the plant s layout must be set up appropriately (e.g. pressure loss when rating the lines with regard to their nominal diameter and length).
- The entire system and its integrated dosing pump must be designed in such a way that an escaping dosing medium (due to the failure of wearing parts such as the diaphragm, or burst hoses) does not lead to permanent damage to system parts or the premises.
- The leakage opening of the dosing head must be visible so that you can detect a diaphragm rupture. It must be possible for the outflow from the leakage drain to be on a free downwards gradient.
- If you use hazardous dosing media, the installation must be designed such that no disproportionately high consequential damages arise due to dosing media escaping.
- To avoid dosing errors after the end of the process, the dosing pump must be locked hydraulically.
- To allow you to easily inspect the pressure conditions in the system, you should provide connections for pressure gauges close to the suction and discharge valves.

© Lutz-Jesco GmbH 2020

8.2 System piping

- The system piping must not exert any force on the connections and valves of the dosing pump.
- This means that steel piping should be connected to the dosing pump by means of flexible pipe sections.
- The nominal diameters of the pipework and the installed fittings should be rated the same as or greater than the nominal diameters of the dosing pump's suction and discharge valves.
- The suction line should be kept as short as possible.
- You should avoid intertwined hoses.
- Avoid loops, since air bubbles can collect.

8.3 Aligning the dosing head

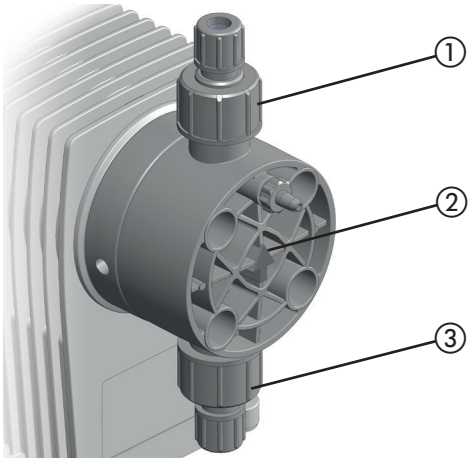

Fig. 12: Aligning the dosing head

When connecting the dosing lines to the dosing pump, you must observe the direction of through-flow (see arrow 2). The dosing head must be aligned vertically. The alignment can be changed in 90° intervals.

The suction valve (3) must always point downwards. Accordingly, arrow (2) and pressure valve (1) always point upwards. This is irrespective of the positioning of the dosing head to the drive.

8.4 Hydraulic connections

8.4.1 Connecting hose clips

Choose the hose connection according to the condition of the hose (material, inner diameter, wall thickness) in order to ensure maximum pressure resistance.

8.4.1.1 Size 4/6 and 6/9

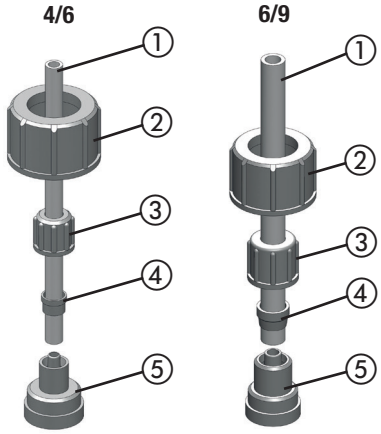

Fig. 13: Hose clips 4/6 and 6/9 (internal and external diameters in mm)

Perform the following working steps:

1. Cut the hose (1) to the appropriate length neatly and at an exact right angle.
2. Place a gasket that is suitable for the dosing medium between the connection (5) and the valve.
3. Screw the connecting piece to the dosing pump's valve using the union nut (2).
4. Thread the union nut (3) and the clamping ring (4) onto the hose.
5. Plug the hose all the way in to the grommet of connection piece.
6. Push the clamping ring onto the grommet of connection piece and screw it to the union nut.
7. Carry out the same procedure with the connection to the dosing pump's other valve.

✓ **Hose clip connected.**

© Lutz-Jesco GmbH 2020
Subject to technical changes.
201218

8.4.1.2 Size 6/12

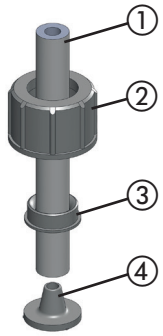

Fig. 14: Hose clip 6/12 (internal and external diameter in mm)

Size 6/12 hose clips only have a union nut. It clamps the hose onto the grommet of the connection piece and at the same time fastens on the dosing pump's valve.

Perform the following working steps:

1. Cut the hose (1) to the appropriate length neatly and at an exact right angle.
2. Place a gasket that is suitable for the dosing medium between the connection (4) and the valve.
3. Push the union nut (2) and the cutting ring (3) over the hose. Press the end of the hose onto the grommet of connection piece. You can do this more easily by moistening the end of the hose on the inside or applying some lubricant to the grommet in the cone area. You should push at least two thirds of the hose onto the grommet of the connection piece.
4. Push the cutting ring over the hose into the cone area on the grommet of connection piece.
5. Screw the union nut onto the valve of the dosing pump.

✓ **Hose clip connected.**

8.4.2 Making the glue-in connection

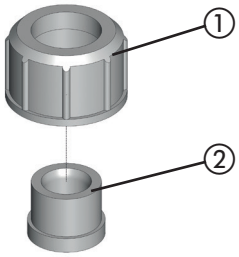

Fig. 15: Glue-in connection

Perform the following working steps:

1. Cut the PVC tube to length.
2. Push the union nut (1) onto the tube.
3. Stick the bonded coupling sleeve (2) to the tube (follow the instructions of the adhesive manufacturer).
4. Screw the union nut onto the valve of the dosing pump. Use a gasket that is suitable for the dosing medium.

✓ **Glue-in connection made.**

8.4.3 Making the cemented connection

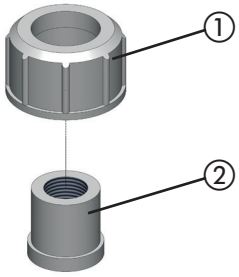

Fig. 16: Cemented connection

Perform the following working steps:

1. Cut the tube to length.
2. Cut the thread (2) onto the end of the tube.
3. Push the union nut (1) onto the tube.
4. Seal the thread. When choosing your sealing material, take into account its resistance to material, temperature and pressure.
5. Screw the union nut onto the valve of the dosing pump. Use a gasket that is suitable for the dosing medium.

✓ **Cemented connection made.**

> Under normal conditions, you only need to screw the hydraulic connections finger-tight. However, due to the material settling, the pre-tension of the screw connection can slacken. This means that you must re-tighten the screw connection before carrying out commissioning.

© Lutz-Jesco GmbH 2020

8.5 Connecting a leakage drain

Lutz-Jesco GmbH dosing pumps are produced to the highest of quality standards with a long service life. However, some parts are subject to operational wear. This is the case particularly with the diaphragms that are continuously subjected to forces during the suction and discharge strokes and to the effects of the dosing medium.

If a diaphragm ruptures, the dosing medium starts to leak. This leakage is drained via the leakage opening. On the flange of the dosing head, there are three openings for this purpose. Depending on the alignment of the dosing pump, the leakage is drained via the downward opening.

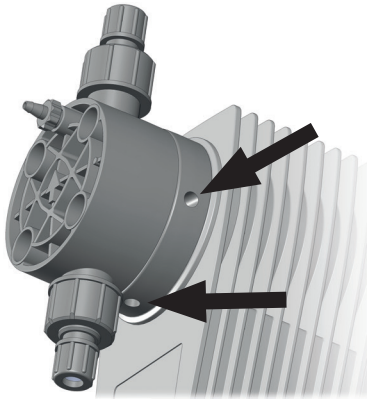

Fig. 17: Openings of the leakage drain

NOTE

Damage to drives due to effervescent media

If a hose is connected to the leakage drain and it is routed back into the dosing tank, effervescent media can enter the drive and damage it.

⇨ Collect the leakage in a collecting pan.

⇨ As an alternative, you can route the leakage back to to the dosing tank using a funnel. You should install the funnel at an adequate distance from the leakage opening.

8.6 Connecting the dosing head venting facility

The dosing heads of the MEMDOS SMART LB / LD 2, 5 and 10 have an integrated dosing head venting unit (except for dosing heads made of stainless steel).

For the procedure when venting, refer to chapter 11.1.1 „Venting the dosing pump“ on page 30.

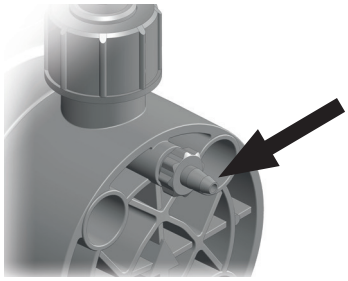

Fig. 18: Dosing head venting facility with hose connection

Perform the following working steps:

1. Connect a 4/6 hose to the dosing head venting facility.
2. Route the other end of the hose into the dosing tank or a collecting tank.

✓ **Dosing head venting facility connected.**

8.7 Hydraulic accessories

The following chapter is intended to give you an overview of installation options.

Please note that these operating instructions are no substitute for the instructions supplied with the accessories in each case. The corresponding documentation supplied with the product applies to safety information and provides exact instructions on assembly.

8.7.1 Injection nozzle

If the pressure line enters a main line, it is advisable to install an injection nozzle.

Injection nozzles have three main functions:

- Dosing the medium into a main line,
- Preventing flowback into the pressure line through a non-return valve.

Notes on assembly:

- Double-ball injection nozzles must be installed into the main line vertically from the bottom. You can install hose and spring-loaded injection nozzles any way you like.
- With dosing media that tend to crystallize, it is advisable to carry out installation into the main line from the bottom. This prevents air bubbles from being trapped.
- Many dosing media tend to contaminate the injection nozzles, which can lead to blockages. In cases like this, it is advisable to install an injection nozzle that is easy to dismantle and block off.

© Lutz-Jesco GmbH 2020
Subject to technical changes.
201218

8.7.2 Contact-type water meter

The contact-type water meter measures the throughflow in a pipe and sends a pulse to the dosing pump, which then starts dosing. This means that ideal proportional dosing is also possible with large throughflow fluctuations.

The contact water meter is connected to connection port 2 (see chapter 9.2.2 „Connection socket 2“ on page 25).

The ratio of throughflow to executed strokes of the dosing pump is determined in "Pulse input" mode (see chapter "Water meter" on page 24).

8.7.3 Pressure-relief valve

Pressure relief valves have an important safety function for protecting the dosing pump and the associated pipes and fittings. The dosing pump can generate a pressure that is many times the rated one. A blocked pressure line can lead to dosing medium escaping.

An improperly high pressure can occur if:

- the shut-off valves are closed even though the dosing pump is running,
- pipes block.

At an appropriate pressure, a pressure relief valve opens a bypass line and protects the system in this way from damage caused by over-pressure.

Notes on assembly:

- The line for returning dosing medium from the pressure relief valve must be routed to the dosing tank or to a collecting pan.
- The pressure in the dosing tank must not be too high so that it is possible to accommodate the returned dosing medium.
- As an alternative, the system can return dosing medium into the suction line in front of the dosing pump. In this case, there must not be a non-return valve or a foot valve in the suction line.
- You should install the pressure relief valve as close as possible to the dosing head.

8.7.4 Back-pressure valve

Back-pressure control valves are necessary if:

- There are considerably fluctuating system pressures,
- the pressure on the suction side is higher than on the discharge side or if you intend to carry out dosing into depressurized lines.

In cases like this, if you do not use a back-pressure valve, imprecise dosing results will occur or overloading will result. The back-pressure valve solves these problems by generating a defined, constant backpressure.

In some circumstances, a back-pressure valve is unnecessary if you use a hose injection nozzle and if the backpressure that it generates is adequate.

8.7.5 Pulsation dampener

Pulsation dampeners have the following functions:

- Damping pulsating delivery flows for processes that require low-pulsation dosing,
- reducing the throughflow resistance with long pipelines.

When installed on the suction side:

- Damping of acceleration mass forces and with this reduction of wear on the dosing pump.
- Preventing cavitation (pull-off of the liquid column) due to too high acceleration.

However, pulsation dampeners also have important safety functions, since they prevent pressure peaks from arising that lead to piping vibrating and cause them to snap.

This problem can occur:

- With the high amplitudes of the vibrations,
- when using long pipes (the severity of the pulsation increases with the length of the pipe),
- when using rigid piping instead of elastic hoses.

Notes on assembly:

- You should carry out assembly in the direct vicinity of the location where you want to damp the pressure peaks (directly in front of the suction valve or directly behind the discharge valve).
- Pulsation dampeners should be installed with throttle valves or back-pressure valves installed directly behind them. By setting the valves appropriately, you can further-optimise damping of the pulsations.
- To prevent unnecessary pipe friction losses, you should lay the connecting line straight and in accordance with the rated width of the pulsation dampener.
- You must separately fasten relatively large pulsation dampeners and ones with hose connections.
- Pipelines must not transfer any mechanical tensions onto the pulsation dampener.

8.7.6 Priming aid

Priming aids are particularly advisable:

- In the case of dosing pumps with small volumetric displacements per stroke or with low stroke length settings,
- with high suction hights,
- with highly dense dosing media,
- at priming for the first time due to dry valves and air in the suction line and the dosing head,
- in dosing systems with frequent downtimes.

Further advantages resulting from priming aids:

- Preventing cavitation in the suction line,
- gas removal,
- optical dosing control with small amounts,
- smoothing of the suction flow.

8.7.7 Level monitoring

Only for LD: Level monitoring of suction-side feeding of the dosing medium to prevent the tank being sucked dry and to ensure that it can be topped up again in good time.

© Lutz-Jesco GmbH 2020

8.7.8 Dosing of suspensions

When dosing suspensions, the dosing head must be rinsed regularly to prevent depositing. To do this, you install a feed line for the rinsing medium (water) in the suction side installation.

8.7.9 Suction pressure regulator

A suction pressure regulator may be necessary if the suction-side installation of the system demonstrates a varying suction pressure or supply pressure:

- Dosing pumps that are installed above dosing tanks deliver less as the tank empties, since the suction head increases.
- Dosing pumps that are installed below dosing tanks deliver less as the tank empties, since the positive delivery pressure reduces.

Further problems that can occur:

- Greater wear on the dosing pump, e.g. diaphragm rupture due to the effects of heavy forces with particularly high tanks and high-density dosing media.
- Idling of the dosing tank in the case of a diaphragm rupture or pipe breakage.
- Impermissibly high forces in the pump transmission that occur when dosing pumps receive the dosing medium directly from the pressure line.
- Reduced performance or destruction of fittings due to cavitation with long suction lines.

Installing a suction pressure regulator is a remedy for the problems above. The suction pressure regulator is opened by the dosing pump's suction pressure. This ensures that no dosing medium can flow if the dosing pump is not running or no vacuum can be generated following a pipe fracture.

Notes on assembly:

- When using a large suction pressure regulator, you should provide a pulsation dampener on the suction side.

© Lutz-Jesco GmbH 2020
Subject to technical changes.
201218

9 Electrical installation

DANGER

Mortal danger from electric shock!

If there is an electrical accident, you must disconnect the dosing pump from the mains as quickly as possible.

⇨ Install an emergency stop switch or integrate the dosing pump into the plant safety concept.

CAUTION

Danger of automatic start up!

The dosing pump does not have an ON/OFF switch and may start to pump as soon as it is connected to the mains supply.

⇨ Install an emergency stop switch or integrate the dosing pump into the plant safety concept.

NOTE

Damage due to incorrect mains voltage

The dosing pump can be damaged if you connect it to the wrong mains voltage.

⇨ Observe the information on the mains supply that is given on the rating plate.

NOTE

Insufficient electromagnetic compatibility

When you connect the dosing pump to a socket without an attached protective earth, it is not possible to guarantee the interference radiation and interference immunity according to EMC regulations.

⇨ Only connect the dosing pump to sockets with an attached protective earth.

9.1 Principles

- The dosing pump has a 110 – 240 V AC 50/60 Hz wide-range power supply unit.
- The electrical connection comply with local regulations.
- The dosing pump must be plugged into a grounded power outlet.
- To avoid dosing errors at the end of the process, the dosing pump must be locked electrically.
- The dosing pump must not be operated by switching the mains voltage on or off.
- Signal cables must not be laid parallel to high-voltage current lines or mains cables. You must route supply and signal lines in separate channels. An angle of 90° is required at line crossings.

NOTE

Compromised functions due to open contacts

The dosing pump is supplied with conductive rubber bands installed in the connection ports 1 (LB) or 1 and 3 (LD). The conductive rubber bands conduct electricity and ensure that the contacts in the connection sockets remain closed when no cables are connected. If the conductive rubber bands in connection sockets are missing or not correctly installed and there are no cables connected to the sockets, it is not possible to start the dosing pump.

⇨ Insert the conductive rubber bands in connection sockets if you do not wire up the connection sockets.

⇨ Ensure that the conductive rubber bands are installed on the correct contacts (see instructions in following section).

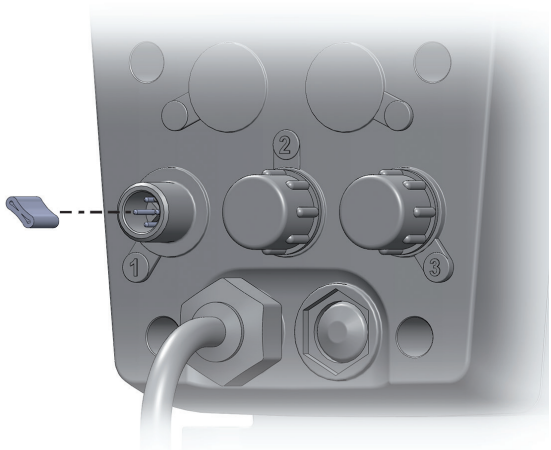

Fig. 19: Removing the conductive rubber bands

© Lutz-Jesco GmbH 2020

9.2 Description of connection sockets

Fig. 20: Connection sockets 1 – 3

Inputs	Connection socket
Release input (LB and LD)	1
Pulse input (only LD)	2
Level input (only LD)	3

Table 16: Inputs of the control unit

9.2.1 Connection socket 1

9.2.1.1 Release input

Using the Release input, it is possible to start or stop the dosing pump externally.

- Potential-free contact
- Connection M12x1 cable with plug connector, A-coded
- Assignment of pin 3, 4

Pin	M12x1 (A-coded)	Assignments	Connection	Cable colour*	
1	-	-	-	Brown	BN
2	-	-	-	White	WH
3		Ground (GND)	3	Blue	BU
4		External On/Off	4	Black	BK

Table 17: Connection socket 1

* Applies to cable colours of cables from Lutz-Jesco GmbH. No liability is accepted for cables from other manufacturers.

For setting the *External On/Off* function, see chapter 11.3 „External On / Off via Release input“ on page 33.

Removing the conductive rubber band

Fig. 21: Conductive rubber band in connection socket 1

Remove the conductive rubber band before inserting the cable in the connection socket.

After the cable has been removed, the conductive rubber band must be reinserted in the connection socket. Insert it between pins 1 and 2 and 3 and 4 as shown in Fig. 21.

9.2.2 Connection socket 2

9.2.2.1 Pulse input

The pulse input makes it possible to control the delivery capacity by means of pulses. The system regulates the delivery capacity by means of the dosing pump's stroke frequency and number of strokes in dependence on the number of pulses and the pulse spacing.

- Provided potential-free contact
- For potential-free NO contact, e.g. a contact-type water meter
- Pulse length min. 4 ms
- Connection M12x1 cable with plug connector, A-coded
- Assignment of pin 1, 3

For information on setting the *External* operating mode, see chapter 11.2.2 „External operation“ on page 31.

Pin	M12x1 (A-coded)	Assignments	Connection	Cable colour*	
1		Pulses	1	Brown	BN
2		-		White	WH
3		Ground (GND)	3	Blue	BU
4	-	-	-	Black	BK

Table 18: Connection socket 2

* Applies to cable colours of cables from Lutz-Jesco GmbH. No liability is accepted for cables from other manufacturers.

© Lutz-Jesco GmbH 2020
Subject to technical changes.
201218

9.2.3 Connection socket 3

9.2.3.1 Level input

Connection for level monitoring of a dosing tank (e.g. a suction line with a float switch).

- Alert and main alarm
- Potential-free contact
- NO contact
- Connection M12x1 cable with plug connector, A-coded
- Assignment of pin 1, 2, 3

For more details on installing the level monitoring system, see on page 22.

> A matching connection cable with A-coded plug connector is integrated in the suction lines / level monitoring systems of Lutz-Jesco GmbH. An adapter is required if using older suction lines with a 3.5 mm jack plug. You can find this adapter and additional cables in the Lutz-Jesco GmbH price list.

Pin	M12x1 (A-coded)	Assignments	Connection	Cable colour*	
1		Pre alarm	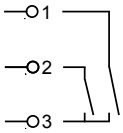	Brown	BN
2		Main alarm		White	WH
3		Ground (GND)		Blue	BU
4	-	-	-	Black	BK

Table 19: Connection socket 3

* Applies to cable colours of cables from Lutz-Jesco GmbH. No liability is accepted for cables from other manufacturers.

Removing the conductive rubber band

Fig. 22: Conductive rubber band in connection socket 3

Remove the conductive rubber band before inserting the cable in the connection socket.

After the cable has been removed, the conductive rubber band must be reinserted in the connection socket. Insert it between pins 1 and 2 and 3 and 4 as shown in Fig. 22.

© Lutz-Jesco GmbH 2020

10 Control

10.1 Operating elements of the control LB

The desired delivery rate of the dosing pump is set using the stroke frequency setting (3).

The stroke frequency can be adjusted while the pump is running or while it is turned off (in depressurized condition).

The scale of the stroke frequency setting shows the value of the setting in percent from 0% (stopped) to 100% (maximum possible stroke frequency).

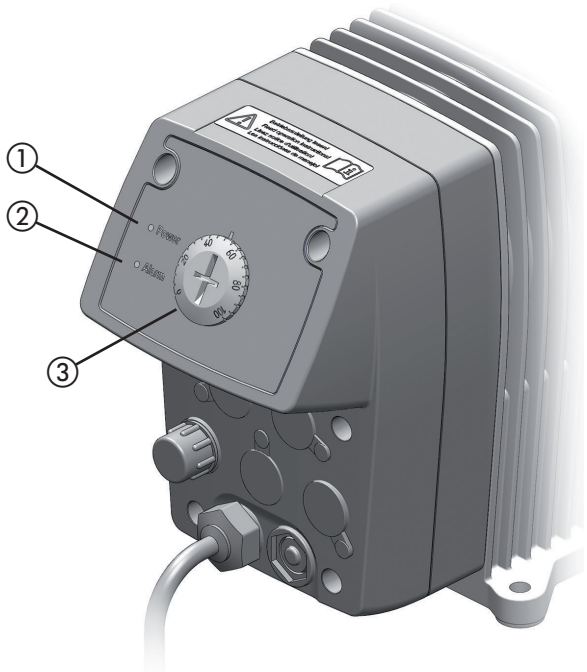

Fig. 23: Stroke frequency setting

Direction of rotation	Effect
Clockwise	Stroke frequency decreases, delivery capacity decreases
Counter -clockwise	Stroke frequency increases, delivery capacity increases

Table 20: Rotation direction and impact

Indicator lights

The Power LED (1) is lit permanently when the dosing pump is connected to the power supply. The Power LED flashes when the dosing pump performs a pressure stroke.

The Alarm LED (2) is lit when a fault has occurred (see chapter 13.1 „Alarm LED illuminates (MEMDOS SMART LB)“ on page 36).

10.2 Operating elements of the control LD

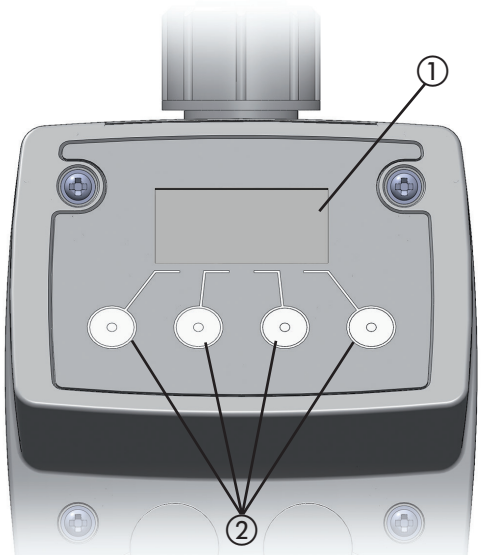

Fig. 24: Operator controls of the control unit

No.	Explanation
1	Graphic display
2	Four multifunction keys

Table 21: Operator controls of the control unit

You operate the dosing pump MEMDOS SMART LD using the four keys below the display. The system shows the respective functions of the keys at the bottom of the display.

The + and - selection keys as well as the ≠ and Ø keys have a repeat function, i.e. if you keep them pressed down, the system automatically repeats the key function.

The display brightness reduces 45 seconds after your last input.

> The dosing pump does not have an ON/OFF switch. After being disconnected from the power supply, the dosing pump starts in the operating mode and configuration that you selected last.

10.2.1 Explanation of the menu icons

10.2.1.1 Dosing status display

Symbol	Meaning
○	Diaphragms stationary (no dosing stroke)
●	Diaphragms in stroke phase (dosing stroke)

Table 22: Explanation of the menu symbols – Dosing status display

© Lutz-Jesco GmbH 2020
Subject to technical changes.
201218

10.2.1.2 Level monitoring

Symbol	Meaning
	Dosing tank full
	Dosing tank at minimum (alert)
	Dosing tank empty (main alarm)

Table 23: Explanation of the menu symbols – Level monitoring

10.2.1.3 Operating modes

Symbol	Meaning
	Internal (manual operation)
	External (operation via pulse signals)

Table 24: Explanation of the menu symbols – Operating modes

10.2.1.4 Release input

Symbol	Meaning
	Contact open (dosing pump stops)
	Contact closed (dosing pump starts)

Table 25: Explanation of the menu symbols – Release input

10.3 Password protection

Symbol	Meaning
	Password protection active
	Password protection inactive

Table 26: Explanation of the menu symbols - password protection

Activating the password protection

If password protection is activated, the dosing pump is protected against unauthorized access. Settings can only be changed after alteration of the password.

WARNING

Caustic burns or other burns through dosing media!

If the password protection is activated, operation of the dosing pump is blocked. The only way to stop a dosing pump without entry of the password is via the power supply. In unfavourable cases, if the password protection has been inadvertently activated or the user has forgotten the password, the dosing pump cannot be stopped in time. This can result in injury.

⇨ Install an emergency stop switch or integrate the dosing pump into the plant safety concept.

You can set any password you like from 0001 to 9999.

1. Press - and + simultaneously.
   ▶ The dosing pump displays the password protection menu.

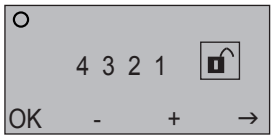

Fig. 25: Activating the password protection

2. Use the + and - keys to set a value from 0 to 9 for the first digit of the code and then press →.
3. Proceed as described under point 2 for the other digits.
4. Choose the last point and press +.
5. Press OK.
   ▶ The dosing pump displays the corresponding symbol:

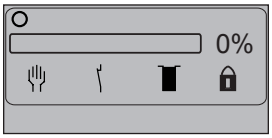

Fig. 26: Start screen with activated password protection

The factory setup before the first change of the pass word is: 4321.

✓ **Password protection activated.**

© Lutz-Jesco GmbH 2020

Entering the password

Once you press any key, you must enter the password. If you enter the code correctly, you have 120 seconds in which to operate the dosing pump. The password must be re-entered after the end of the 120 seconds, even if this runs out during entry.

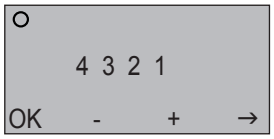

Fig. 27: Entering the password

1. Use the + and - keys to set a value from 0 to 9 for the first digit of the code and then press →.
2. Proceed as described under point 1 for the other digits.
3. After entering all the digits, press OK.

▶ If your input is correct, the dosing pump displays the start screen.

> If you have forgotten the code, please contact Lutz-Jesco GmbH.

10.3.1.1 Deactivating the password protection

1. Press - and + simultaneously.
2. Press → until 🔒 is selected.
3. Press -.
4. Press OK.

✓ **Password protection deactivated.**

11 Operation

WARNING

Caustic burns or other burns through dosing media!

After connecting the mains supply, residual dosing media in the dosing head can spray out.

⇨ Before connecting the mains supply, connect the dosing lines.

⇨ Check that all the screw connections have been tightened correctly and are leak-proof.

CAUTION

Danger of automatic start up!

The dosing pump does not have an ON/OFF switch and may start to pump as soon as it is connected to the mains supply. This means that dosing medium can escape. Depending on the type and hazardousness of the dosing medium, this can result in injury.

⇨ Stop the dosing pump before disconnecting it from the mains supply.

⇨ Ensure that the dosing pump has been installed correctly before connecting it to the mains supply.

11.1 Commissioning the dosing pump

Precondition for action:

✓ The dosing pump has been assembled and installed in accordance with chapter 7 „Installing the Dosing Pump“ on page 17, chapter 8 „Hydraulic installations“ on page 18 and chapter 9 „Electrical installation“ on page 24.

✓ All the mechanical fastenings have been inspected to ensure adequate load-bearing capacity.

✓ The dosing head screws have been tightened with the correct torque (see chapter 12.2 „Tighten up dosing head bolts“ on page 34).

✓ All the hydraulic sections have been inspected to ensure they are adequately leak-proof and that the through flow direction is correct.

For initial commissioning, it is advisable to use water as the dosing medium to check that the system is leak-proof and that the dosing pump is functioning correctly. Check first whether undesirable reactions could occur between the actual dosing medium and the water.

Perform the following working steps:

1. Open the shut-off valves on the suction and discharge sides if present.
2. Plug in the dosing pump's mains plug to the power supply.
3. If the dosing head is fitted with a vent screw, vent the dosing pump (see section 11.1.1 „Venting the dosing pump“ on page 30).
4. LB: Turn the stroke frequency setting slowly counter-clockwise until the dosing pump draws in enough and dosing starts.

   LD: Select an operating mode and start the dosing pump in accordance with the instructions in the chapter 11.2 „MEMDOS SMART LD: Operating modes“ on page 31.

▶ The dosing pump primes. If it does not prime enough, use a priming aid (see chapter 8.7.6 „Priming aid“ on page 22).

At initial commissioning, it is advisable to prime the pump without backpressure. For this purpose, we recommend installing a relief valve on the discharge side of the dosing pump.

✓ **The dosing pump is commissioned.**

11.1.1 Venting the dosing pump

Size 2, 5 and 10 plastic dosing heads are fitted with a vent screw. Gas bubbles can be removed from the dosing head using vent screws, in order to improve the performance of the pumps / to remedy faults.

CAUTION

Danger of personal injury and material damage!

Dosing medium can escape if you loosen connections on the dosing head (e.g. for venting) during operation.

⇨ Use sufficient personal protective equipment.

⇨ Follow the safety data sheet of the dosing medium.

⇨ Clean the dosing pump if dosing medium escapes.

⇨ Dispose of the dosing medium correctly.

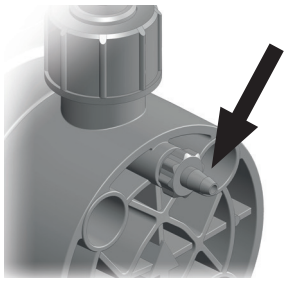

Fig. 28: Dosing head venting facility with vent screw

Precondition for action:

✓ The dosing head venting facility connected has been connected in accordance with the chapter 8.6 „Connecting the dosing head venting facility“ on page 21.

© Lutz-Jesco GmbH 2020

Venting the MEMDOS SMART LB

Perform the following working steps:

1. Open the vent screw by one complete turn (looking onto the dosing head, anti-clockwise).
2. Start the pump. To this end, set the stroke frequency to 100%.
3. Stop the pump as soon as there is a continuous throughflow from the dosing head venting facility with no air bubbles. Turn the stroke frequency setting to 0% to stop the pump. The dosing pump stops delivery.
4. Close the vent screw.

✓ **The dosing pump is vented.**

Venting the MEMDOS SMART LD

Perform the following working steps:

1. Select the *Internal*.operating mode.
2. Press `Stop`.
3. Keep `+` depressed until 100% delivery capacity is achieved.
4. Open the vent screw by one complete turn (looking onto the dosing head, anti-clockwise).
5. Press `Start`.
   ▶ The dosing pump starts delivery at the highest stroke frequency.
6. Press `Stop`, as soon as there is a continuous throughflow from the dosing head venting facility with no air bubbles.
   ▶ The dosing pump stops delivery.
7. Close the vent screw.

✓ **The dosing pump is vented.**

> If you are using strongly effervescent dosing media, allow them to flow out continuously. Open the vent screw such that about one drop per 1 – 3 strokes escapes, then close the discharge.

11.2 MEMDOS SMART LD: Operating modes

The MEMDOS SMART LD dosing pump has the following operating modes:

- *Internal* - Manual setting of the delivery capacity,
- *External* - Controlling the stroke frequency and number of strokes in dependence on the number of pulses and the pulse spacing.

11.2.1 Internal operation

11.2.1.1 Selecting the operating mode

1. Press the `Int` key to select the operating mode.
   ▶ The dosing pump displays the start screen of Internal operating mode with the symbol ✋.

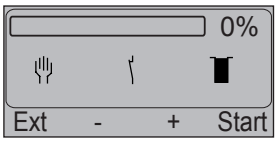

Fig. 29: Start display internal operation

11.2.1.2 Starting the dosing pump

1. Use the `+` and `-` keys to set the desired stroke frequency. Adjustment range: 0 – 100%.

> Pressing the `+` and `-` keys increases/decreases the stroke frequency by 1%. If you keep the key depressed, the stroke frequency increases/decreases increasingly in intervals of 2, 5 and 10.

2. Press `Start`.

✓ **Dosing pump has started.**

11.2.1.3 Stopping the dosing pump

➔ Press `Stop`.
▶ The system displays the "Stop" signal and `Stop` changes to `Start`.

✓ **Dosing pump has stopped.**

11.2.2 External operation

The stroke frequency and consequently the delivery capacity of the dosing pump MEMDOS SMART LD in the *External* operating mode is determined by the quantity and interval of the incoming pulses in connection with the set transmission factor.

11.2.2.1 Selecting the operating mode

➔ Press `Ext` to start the device.
▶ The dosing pump displays the start screen of the *External* operating mode with the symbol ⊕.

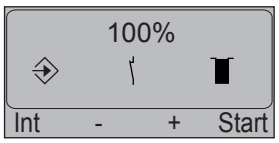

Fig. 30: Start display external operation

11.2.2.2 Setting the transmission and reduction

The transmission and reduction factors can be set in 1% intervals of 1% to 1000%. A set value of 100% means that the dosing pump executes one dosing stroke per incoming pulse signal. For values above 100%, the dosing pump executes more dosing strokes per pulse signal accordingly.

For values below 100%, the dosing pump executes less than one dosing stroke per pulse signal, meaning that several pulse signals are required before a dosing stroke is executed.

The number of pulse signals required for a dosing stroke is displayed on the dosing pump display for values below 100%.

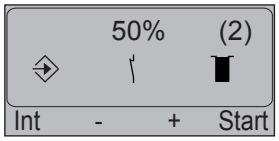

Fig. 31: Number of pulse signals required (here: 2)

Examples for transmission / reduction

Number of pulses	Setting	Dosing strokes
4	25%	1
2	50%	1
1	100%	1
2	100%	2
4	125%	5
1	1000%	10

Table 27: Examples for transmission / reduction of pulse signals

In cases of sequences of sequential pulses, it must be noted that the number of dosing strokes corresponding to the pulses does not always follow the pulses immediately in certain settings. This is due to the fact that only entire dosing strokes are executed, e.g. not half or quarter dosing strokes. Depending on the transmission or reduction factor and the number of pulses, however, there is a possibility of uneven results with "pending" pulse signals. In theses cases, the required number of dosing strokes is only achieved after a number of pulse cycles.

Examples:

The dosing pump receives pulses with a reduction factor of 30%. For the first stroke, it requires 4 pulses in this setting (4 x 30% = 120%), as 3 pulses (3 x 30% = 90%) are insufficient for one dosing stroke (= 100%). However, the second dosing stroke is executed after just 3 more pulses, as the stroke buffer of the dosing pump still has 20% pending from the first 4 pulses (120% - 100% = 20%) and this is added to the 3 pulses (90% + 20% = 110%). The third dosing stroke also only requires 3 additional pulses (90% + 10% = 100%). A further 4 pulses are then required for the fourth dosing stroke.

If pulses are transferred to the dosing pump with a transmission factor of 125%, a dosing stroke is executed for each of the first 3 pulses. With the 4th pulse, it executes 2 dosing strokes (3x 25% pending from the first 3 pulses + 125% = 200%).

The dosing pump has a dynamic stroke buffer which includes the interval between the pulses in the calculation and adjusts the distribution of the dosing strokes accordingly.

11.2.2.3 Calculating the transmission factor

The dosing pump MEMDOS SMART LD has a defined stroke volume per dosing stroke. If a certain dosing quantity is required per pulse, the corresponding transmission factor can be calculated for the external operating mode.

> You can find a simple means of performing the necessary calculations on the Lutz-Jesco GmbH homepage. To do so, click on the following link or enter it in your browser:
> http://www.lutz-jesco.com/online-helfer-memdos-SMART-ld

11.2.2.4 Starting the dosing pump

Precondition for action:

✓ The dosing pump has been connected in accordance with the chapter 9.2.2 „Connection socket 2“ on page 25.

1. Press `Start`.
2. Supply pulses to the pulse input of the dosing pump.

✓ **Dosing pump has started.**

11.2.2.5 Stopping the dosing pump

➔ Stop the incoming pulses or press Stop.

✓ **Dosing pump has stopped.**

11.2.2.6 Operation with contact-type water meter

The dosing pump MEMDOS SMART LD is prepared for operation with a contact-type water meter. The contact sequence of the water meter and the size of the dosing pump must be matched to each other (calibrated).

> You can find a simple means of performing the necessary calculations on the Lutz-Jesco GmbH homepage. To do so, click on the following link or enter it in your browser:
> http://www.lutz-jesco.com/online-helfer-memdos-SMART-ld

© Lutz-Jesco GmbH 2020

11.3 External On / Off via Release input

11.3.1 MEMDOS SMART LB

The dosing pump MEMDOS SMART LB can be started or stopped via an open or closed switching contact at the release input.

11.3.2 MEMDOS SMART LD

Regardless of the selected operating mode, you can start or stop the dosing pump MEMDOS SMART LD by means of the closed switching contact on the Release input.

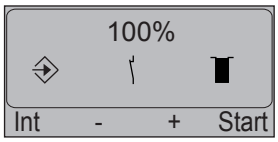

Fig. 32: Start screen of external operation with symbol for closed contact in centre

For the significance of the menu symbols, see chapter 10.2.1 „Explanation of the menu icons“ on page 27.

11.3.2.1 Starting the dosing pump

➔ Close the switching contact on the Release input.

✓ **Dosing pump has started.**

11.3.2.2 Stopping the dosing pump

➔ Open the switching contact on the Release input.

✓ **Dosing pump has stopped.**

11.4 Decommissioning the dosing pump

Perform the following working steps:

1. Stop the dosing pump in accordance with the selected operating mode.
2. Unplug the dosing pump's mains plug from the power supply.
3. Disconnect all electrical connections.
4. Depressurize all the hydraulic parts in the system.
5. Unplug all the hydraulic connections on the dosing pump.
6. Empty the dosing head.
7. Remove any residual dosing medium from the dosing head by flushing the system with a washing agent. Ensure that the washing agent is compatible with the dosing medium.

✓ **Dosing pump is decommissioned.**

11.5 Shutting down in an emergency

- In an emergency, you must immediately disconnect the dosing pump from the mains supply or activate the Emergency Stop switch installed in the system.
- Depending on the type of incident, you must depressurized the hydraulic connections or locked to prevent dosing medium from escaping.
- You must follow the safety data sheet of the dosing medium.

11.6 Storage

Storing the dosing pump correctly extends its service life. You should avoid negative influences such as extreme temperatures, high humidity, dust, chemicals, etc.

Ensure ideal storage conditions where possible:

- The storage place must be cold, dry, dust-free and generously ventilated.
- Temperatures between + 2 °C and + 40 °C (for PP and PVDF dosing heads, between + 2 °C and + 60 °C).
- Relative air humidity must not exceed 90 %.

11.7 Transportation

Perform the following working steps:

- The unit should be thoroughly cleaned. Any dangerous dosing media must be additionally neutralised and decontaminated.
- All accessories should be dismantled.
- All openings should be closed, so that no foreign objects can get into the system.
- The dosing pump must be suitably packed, preferably in the original packing, for transportation.

If the device is sent back to the manufacturer, please follow chapters 17 „Declaration of no objection“ on page 42 and 18 „Warranty claim“ on page 43.

11.8 Disposal of old equipment

- The waste unit must be thoroughly cleaned. Any dangerous dosing media must be additionally neutralised and decontaminated.
- Any residual dosing media must be removed in a professional manner.
- The dosing pump must be disposed of in accordance with applicable local laws and regulations. The device does not belong to household waste!
- As the disposal regulations may differ from country to country, please consult your supplier if necessary.
  In Germany, the manufacturer must provide free-of-charge disposal provided the unit has been sent in a safe manner.

© Lutz-Jesco GmbH 2020
Subject to technical changes.
201218

12 Maintenance

Dosing pumps by Lutz-Jesco are manufactured to the highest quality standards and have a long service life. Nevertheless, some of their parts are subject to wear due to operation (e.g. diaphragms, valve seats, valve balls). This means that regular visual inspections are necessary to ensure a long operating life. Regular maintenance will protect the dosing pump from operation interruptions.

DANGER

Mortal danger from electric shock!

Live parts can inflict fatal injuries.

⇨ Before carrying out any maintenance work, always disconnect the dosing pump from the power supply.

⇨ Secure the dosing pump from accidental power-up.

WARNING

Caustic burns or other burns through dosing media!

While working on the dosing head, valves and connections, you may come into contact with dosing media.

⇨ Use sufficient personal protective equipment.

⇨ Rinse the dosing pump with a medium (e.g. water) which does not pose any risk.

⇨ Release pressure in hydraulic parts.

⇨ Never look into open ends of plugged pipelines and valves.

WARNING

Caustic burns or other burns through dosing media!

After connecting the mains supply, residual dosing media in the dosing head can spray out.

⇨ Before connecting the mains supply, connect the dosing lines.

⇨ Check that all the screw connections have been tightened correctly and are leak-proof.

CAUTION

Danger of personal injury and material damage!

The dosing pump can generate a pressure that is many times the rated one. The dosing medium can escape in the case of material failure or wear on the dosing head, the connection pipe or the seals that are used.

⇨ Carry out maintenance work at the recommended intervals.

12.1 Maintenance intervals

This table gives you an overview of maintenance work and the intervals at which you must carry it out. The next few sections contain instructions for carrying out this work.

Maintenance work to be carried out	Frequency
Check that piping is seated firmly	Regularly
Check that suction and discharge valves are seated firmly	Regularly
Clean suction and discharge valves	Regularly
Check that electrical connections are not damaged	Regularly
Tighten up dosing head bolts	■ Regularly ■ Before initial commissioning ■ After each diaphragm change
Check diaphragm for leakage due to rupture	Regularly (as long as no leak monitoring system is installed)
Check that the installed accessories are functioning correctly	Regularly
Check the dosing pump for unusual noises during operation, unusual temperatures or smells	Regularly
Replace parts that are subject to wear (diaphragms, valves, seals, etc.)	When unacceptable levels of wear are detected
Rinse out and clean the dosing pump	Before changing diaphragms Before taking out of service for a long period of time After feeding aggressive, sticky, crystallising or contaminated liquids

Table 28: Maintenance information and maintenance intervals

12.2 Tighten up dosing head bolts

➔ Tighten the dosing head bolts in diagonally opposite sequence with a torque wrench.

The necessary torque is 180 Ncm.

© Lutz-Jesco GmbH 2020

12.3 Change the diaphragm

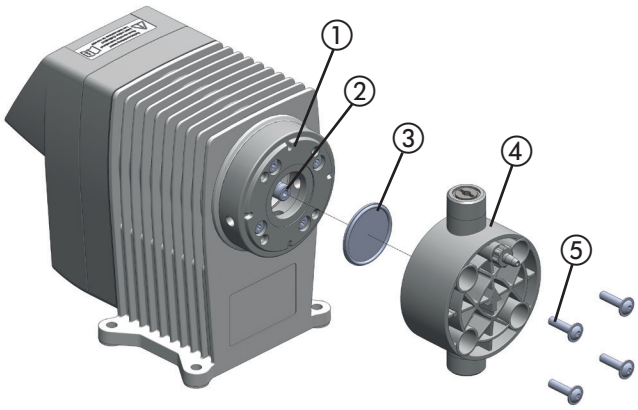

Fig. 33: Exploded view of the diaphragm and dosing head

12.3.1 Remove the old diaphragm

Precondition for action:

✓ You have disconnected the dosing pump from the mains supply.

✓ You have depressurised the hydraulic sections of the plant.

✓ You have rinsed the dosing pump using a safe medium (e.g. water).

Perform the following working steps:

1. Screw out the four screws (5) on the dosing head using a suitable tool (SW 3 Allen key) and take off the dosing head (4).
2. Use pliers to bend the edge of the diaphragm (3) slightly upwards and screw it out counter-clockwise.

12.3.2 Install a new diaphragm

Precondition for action:

✓ You have thoroughly cleaned the diaphragm rod (2) and the diaphragm flange (1) so that the new diaphragm is not affected by dosing medium residues.

✓ The diaphragm (3) thread was lightly greased (e.g. Molycote Longterm W2).

1. Screw the diaphragm manually in the clockwise direction until it safely contacts into the diaphragm rod.
2. Bring the dosing head into position and insert the screws. First tighten the screws finger-tight. After this, tighten the bolts on the diagonal, e.g. top left – bottom right – top right – bottom left.

NOTE

Damage to the dosing head/diaphragm leaks

If you tighten the screws too much, this can lead to the dosing head being damaged. However, not tightening the screws enough leads to the diaphragm being leaky and correct functioning being affected.

⇨ Tighten the screws to a torque of 180 Ncm.

✓ **Diaphragm change finished.**

It may be necessary to gauge the delivery capacity after replacing the diaphragm or other dosing pump spare parts.

12.4 Clean suction and discharge valves

Contaminated valves affect the dosing preceision and this means that you should clean the valves on a regular basis.

With dosing heads made of plastic, when replacing a valve you must replace the complete dosing head (see chapter 14 „Spare parts“ on page 39).

© Lutz-Jesco GmbH 2020
Subject to technical changes.
201218

13 Troubleshooting

See below for information about how to rectify faults on the device or the system. If you cannot eliminate the fault, please consult with the manufacturer on further measures or return the dosing pump for repair.

13.1 Alarm LED illuminates (MEMDOS SMART LB)

Possible cause	Remedy
System backpressure too high (measured at discharge connection of dosing pump).	➔ Clean blocked injection nozzle. ➔ Install pulsation dampeners to reduce pressure peaks if pipes are too long. ➔ Check function of safety valves.
Driving belt torn.	➔ Contact the manufacturer.

Table 29: Type of fault: Alarm LED illuminates (MEMDOS SMART LB)

13.2 Dosing pump not delivering or output too low

Possible cause	Remedy
Wrong type of dosing pump selected.	➔ Check the dosing pump's technical data and if necessary select a type with a higher delivery capacity.
Valve leaking or blocked.	➔ Clean the valve and vent the dosing pump. ➔ Tighten the screw connections.
Valve installed incorrectly.	➔ Reassemble the valve. Ensure that the valve balls are located above the valve seats.
Valve damaged (e.g. valve balls).	➔ Remove the damaged parts or install a new valve.
Suction line is leaking.	➔ Seal the leak locations or replace the parts.
Suction line is blocked (e.g. screen in foot valve).	➔ Clean the suction line.
Shut-off valves closed.	➔ Open the shut-off valves. Inspect the dosing pump for possible damage.
Suction head too high.	➔ Set the dosing pump to feed or reduce the suction head. ➔ Install a priming aid.

Table 30: Type of fault: Dosing pump not delivering or output too low

Possible cause	Remedy
Viscosity too high.	➔ Possibly reduce the concentration of the dosing medium or increase the temperature. ➔ Install spring-loaded valves. ➔ Increase the pipe diameter.
Current supply interrupted.	➔ Reconnect the current supply.
The dosing pump's electrical data does not match that of the mains supply.	➔ Check the electrical installation.
System backpressure too high (measured at discharge connection of dosing pump).	➔ Clean blocked injection nozzle. ➔ Install pulsation dampeners to reduce pressure peaks if pipes are too long. ➔ Check function of safety valves.

Table 30: Type of fault: Dosing pump not delivering or output too low

13.3 Dosing pump does not prime

Possible cause	Remedy
Valve leaking or blocked.	➔ Clean the valve and vent the dosing pump. ➔ Tighten the screw connections.
Valve installed incorrectly.	➔ Reassemble the valve. Ensure that the valve balls are located above the valve seats.
Valve damaged (e.g. valve balls).	➔ Remove the damaged parts or install a new valve.
Suction line is leaking.	➔ Seal the leak locations or replace the parts.
Suction line is blocked (e.g. screen in foot valve).	➔ Clean the suction line.
Shut-off valves closed.	➔ Open the shut-off valves. Inspect the dosing pump for possible damage.
Suction head too high.	➔ Set the dosing pump to feed or reduce the suction head. ➔ Install a priming aid.

Table 31: Type of fault: Dosing pump does not prime

© Lutz-Jesco GmbH 2020

Possible cause	Remedy
Viscosity too high.	➔ Possibly reduce the concentration of the dosing medium or increase the temperature. ➔ Install spring-loaded valves. ➔ Increase the pipe diameter.
Current supply interrupted.	➔ Reconnect the current supply.
Dry the valves.	➔ Dampen the dosing head and the valves ➔ Vent the dosing head.
Air in the suction line with simultaneous pressure on the discharge valve.	➔ Vent the dosing head or the lines.

Table 31: Type of fault: Dosing pump does not prime

13.4 Delivery rate varies

Possible cause	Remedy
Valve leaking or blocked.	➔ Clean the valve and vent the dosing pump. ➔ Tighten the screw connections.
Valve damaged (e.g. valve balls).	➔ Remove the damaged parts or install a new valve.
Suction line is leaking.	➔ Seal the leak locations or replace the parts.
Suction line is blocked (e.g. screen in foot valve).	➔ Clean the suction line.
Viscosity too high.	➔ Possibly reduce the concentration of the dosing medium or increase the temperature. ➔ Install spring-loaded valves. ➔ Increase the pipe diameter.
The dosing pump's electrical data does not match that of the mains supply.	➔ Check the electrical installation.
Suction side pressure too high (pump siphoning).	➔ Install a back-pressure valve in the pressure line.
Pressure peaks due to acceleration with long suction lines.	➔ Install a suction pressure regulator.

Table 32: Type of fault: Delivery rate varies

Possible cause	Remedy
Imprecise dosing due to changeable positive and negative suction heads.	➔ Install a suction pressure regulator.
System backpressure too high (measured at discharge connection of dosing pump).	➔ Clean blocked injection nozzle. ➔ Install pulsation dampeners to reduce pressure peaks if pipes are too long. ➔ Check function of safety valves.

Table 32: Type of fault: Delivery rate varies

13.5 No stroke movement observed

Possible cause	Remedy
Current supply interrupted.	➔ Reconnect the current supply.
The dosing pump's electrical data does not match that of the mains supply.	➔ Check the electrical installation.
Pressure peaks due to acceleration with long suction lines.	➔ Install a suction pressure regulator.
System backpressure too high (measured at discharge connection of dosing pump).	➔ Clean blocked injection nozzle. ➔ Install pulsation dampeners to reduce pressure peaks if pipes are too long. ➔ Check function of safety valves.

Table 33: Type of fault: No stroke movement observed

13.6 Dosing pump delivery rate too high

Possible cause	Remedy
Suction side pressure too high (pump siphoning).	➔ Install a back-pressure valve in the pressure line.
Pressure peaks due to acceleration with long suction lines.	➔ Install a suction pressure regulator.

Table 34: Type of fault: Dosing pump delivery rate too high

© Lutz-Jesco GmbH 2020
Subject to technical changes.
201218

13.7 Diaphragm is torn or tears too often

Possible cause	Remedy
Shut-off valves closed.	➔ Open the shut-off valves. Inspect the dosing pump for possible damage.
Pressure peaks due to acceleration with long suction lines.	➔ Install a suction pressure regulator.
The materials are not suitable for the dosing medium being used.	➔ Check the resistance of the materials.
Diaphragm not screwed up to the end stop on the dia-phragm rod.	➔ Screw a new diaphragm up to the end stop.
System backpressure too high (measured at discharge connection of dosing pump).	➔ Clean blocked injection nozzle. ➔ Install pulsation dampeners to reduce pressure peaks if pipes are too long. ➔ Check function of safety valves.
Media sediment in dosing head.	➔ Clean the dosing head.

Table 35: Type of fault: Diaphragm is torn or tears too often

© Lutz-Jesco GmbH 2020

14 Spare parts

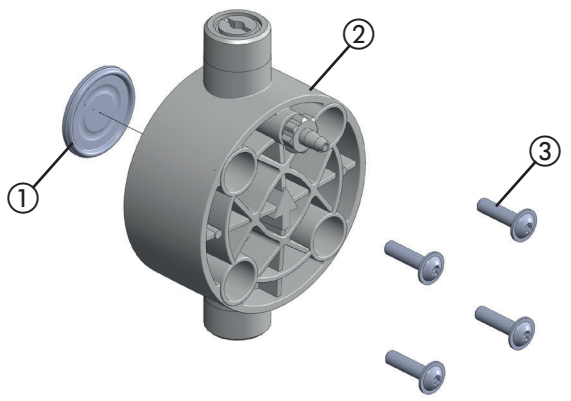

Fig. 34: Spare parts set for MEMDOS SMART LB / LD 2, 5, 10 (plastic dosing head)

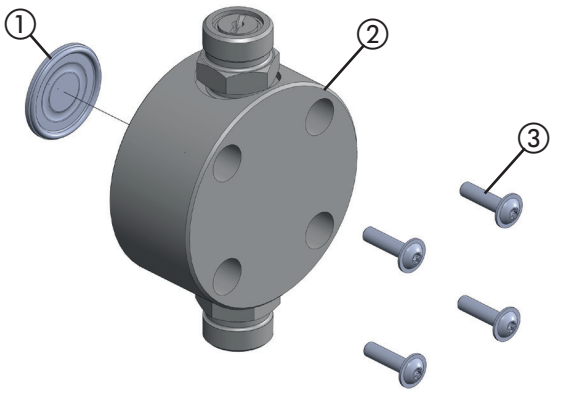

Fig. 35: Spare parts set for MEMDOS SMART LB / LD 2, 5, 10 (stainless steel dosing head (1.4571))

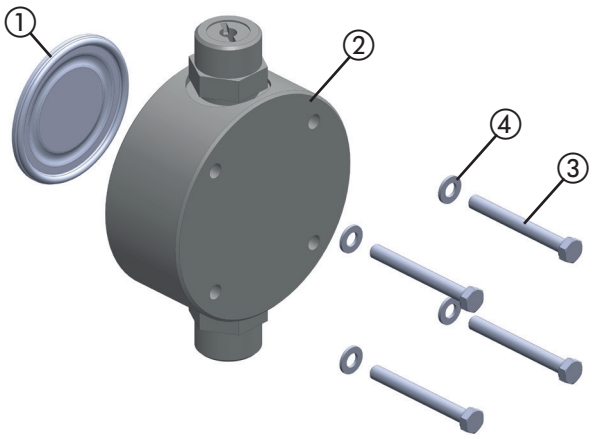

Fig. 36: Spare parts set for MEMDOS SMART LB / LD 15, 20, 30 (plastic or stainless steel dosing head (1.4571))

Required sets for a complete service:

- 1 diaphragm spare parts kit,
- 1 dosing head spare parts set including valves.

14.1 Diaphragm spare parts kits

Diaphragm spare parts set containing:

- 1 Diaphragm (item 1)
- 1 set of dosing head screws (item 3),
- 1 set washers (item 4) (only MEMDOS SMART LB / LD 15, 20, 30).

Diaphragm kit	Size	Part No.
	2	39122
	5, 10	39123
	15, 20, 30	40607

14.2 Dosing head spare parts kits including valves

Spare parts set: dosing head including screws consisting of:

- Dosing head (item 2),
- Valves,
- 1 set of dosing head screws (item 3),
- 1 set washers (item 4) (only MEMDOS SMART LB / LD 15, 20, 30).

PVC	Size	Part No.
Ceramics/PVDF/FPM (ball/seat/seals)	2	41192
	5, 10	38983
	15, 20, 30	40571

PP	Size	Part No.
Ceramics/PVDF/FPM (ball/seat/seals)	2	41193
	5, 10	38980
	15, 20, 30	40572

PVDF	Size	Part No.
PTFE/PVDF/FPM (ball/seat/seals)	2	41194
	5, 10	38986
	15, 20, 30	40573

Stainless steel (1.4571)	Size	Part No.
Stainless steel / stainless steel / FPM (ball/seat/seals)	2	41195
	5, 10	39944
	15, 20, 30	40574

© Lutz-Jesco GmbH 2020
Subject to technical changes.
201218

15 Delivery characteristic curves

This Chapter is intended to give you an idea of the delivery capacity that the dosing pump can achieve at specific back pressures. These delivery capacities were determined on the manufacturer's test stands. They apply at 20 °C (68 °F) for water, at 100 % stroke frequency. The delivery capacity depends on the medium (density and viscosity) and temperature. Since these conditions vary at every installation location, you should calibrate the dosing pump.

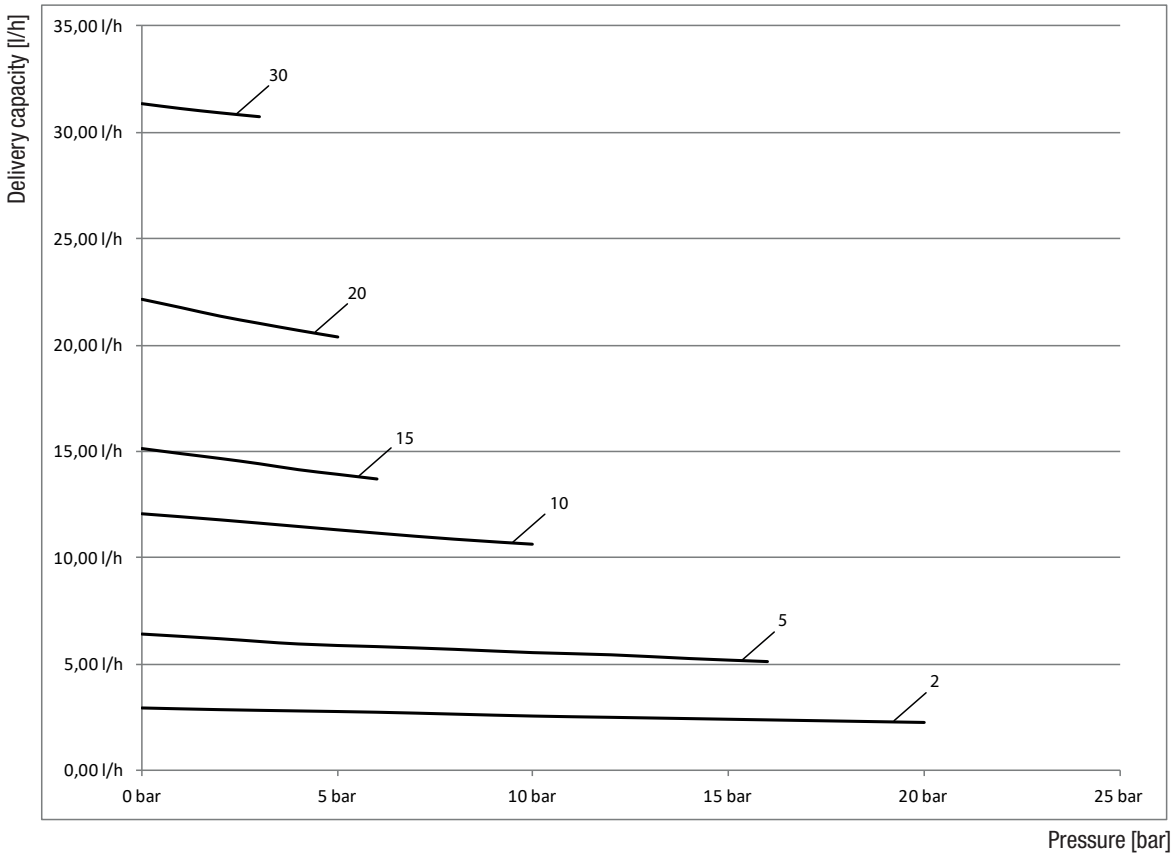

Fig. 37: Delivery characteristic curves MEMDOS SMART LB / LD 2 – 30

© Lutz-Jesco GmbH 2020

16 EC Declaration of Conformity

(DE) EU-Konformitätserklärung
Hiermit erklären wir, dass das nachfolgend bezeichnete Gerät aufgrund seiner Konzipierung und Bauart sowie in der von uns in Verkehr gebrachten Ausführung den einschlägigen grundlegenden Sicherheits- und Gesundheitsanforderungen der aufgeführten EG-Richtlinien entspricht. Bei einer nicht mit uns abgestimmten Änderung am Gerät verliert diese Erklärung ihre Gültigkeit.

(EN) EC Declaration of Conformity
We hereby certify that the device described in the following complies with the relevant fundamental safety and sanitary requirements and the listed EC regulations due to the concept and design of the version sold by us.
If the device is modified without our consent, this declaration loses its validity.

(FR) Déclaration de conformité CE
Nous déclarons sous notre propre responsabilité que le produit ci-dessous mentionné répond aux exigences essentielles de sécurité et de santé des directives CE énumérées aussi bien sur le plan de sa conception et de son type de construction que du modèle que nous avons mis en circulation.
Cette déclaration perdra sa validité en cas d'une modification effectuée sur le produit sans notre accord explicite.

(ES) Declaración de conformidad CE
Por la presente declaramos que, dados la concepción y los aspectos constructivos del modelo puesto por nosotros en circulación, el aparato mencionado a continuación cumple con los requisitos sanitarios y de seguridad vigentes de las directivas de la U.E. citadas a continuación.
Esta declaración será invalidad por cambios en el aparato realizados sin nuestro consentimiento.

(NL) EU-overeenstemmingsverklaring
Ondergetekende Lutz-Jesco GmbH, bevestigt, dat het volgende genoemde apparaat in de door ons in de handel gebrachte uitvoering voldoet aan de eis van, en in overeenstemming is met de EU-richtlijnen, de EU-veiligheidsstandaard en de voor het product specifieke standaard. Bij een niet met ons afgestemde verandering aan het apparaat verliest deze verklaring haar geldigheid.

Bezeichnung des Gerätes:	Schrittmotor-Membrandosierpumpe
Description of the unit:	Stepper Motor-driven Diaphragm Dosing Pump
Désignation du matériel:	Pompe doseuse à membrane entraînée par moteur pas à pas
Descripción de la mercancía:	Bomba dosificadora de membrana con motor paso a paso
Omschrijving van het apparaat:	Stappenmotor-Membraandoseerpomp
Typ: **Type:**	MEMDOS SMART 2 – 30
EU-Richtlinien: **EC directives:**	2006/42/EG, 2014/30/EU Die Schutzziele der Niederspannungsrichtlinie 2014/35/EU wurden gemäß Anhang I, Nr. 1.5.1 der Maschinenrichtlinie 2006/42/EG eingehalten. The protective aims of the Low Voltage Directive 2014/35/EU were adhered to in accordance with Annex I, No. 1.5.1 of the Machinery Directive 2006/42/EC.
Harmonisierte Normen: **Harmonized standards:**	DIN EN ISO 12100:2011-03, DIN EN 809:2012-10, DIN EN 61000-6-2:2005, DIN EN 61000-6-3:2007 + A1:2011
Dokumentationsbevollmächtigter: **Authorized person for documentation:**	Lutz-Jesco GmbH

Heinz Lutz
Geschäftsführer / Chief Executive Officer
Lutz-Jesco GmbH
Wedemark, 01.08.2016

Lutz-Jesco GmbH
Am Bostelberge 19
30900 Wedemark
Germany

© Lutz-Jesco GmbH 2020
Subject to technical changes.
201218

17 Declaration of no objection

Please copy the declaration, stick it to the outside of the packaging and return it with the device.

Declaration of no objection

Please fill out a separate form for each appliance!

We forward the following device for repairs:

Device and device type: ..... Part-no.: .....

Order No.: ..... Date of delivery: .....

Reason for repair: .....

.....

.....

Dosing medium

Description: ..... Irritating: ☐ Yes ☐ No

Properties: ..... Corrosive: ☐ Yes ☐ No

We hereby certify, that the product has been cleaned thoroughly inside and outside before returning, that it is free from hazardous material (i.e. chemical, biological, toxic, flammable, and radioactive material) and that the lubricant has been drained.

If the manufacturer finds it necessary to carry out further cleaning work, we accept the charge will be made to us.

We assure that the aforementioned information is correct and complete and that the unit is dispatched according to the legal requirements.

Company / address: ..... Phone: .....

..... Fax: .....

..... Email: .....

Customer No.: ..... Contact person: .....

Date, Signature: .....

© Lutz-Jesco GmbH 2020

18 Warranty claim

Warranty claim

Please copy and send it back with the unit!

If the device breaks down within the period of warranty, please return it in a cleaned condition with the complete warranty claim.

Sender

Company: ..... Phone: ..... Date: .....

Address: .....

Contact person: .....

Manufacturer order no.: ..... Date of delivery: .....

Device type: ..... Serial number: .....

Nominal capacity / nominal pressure: .....

Description of fault: .....

.....

.....

.....

.....

.....

.....

.....

Service conditions of the device

Point of use / system designation: .....

.....

.....

Accessories used (suction line etc.): .....

.....

.....

.....

.....

Commissioning (date): .....

Duty period (approx. operating hours): .....

Please describe the specific installation and enclose a simple drawing or picture of the chemical feed system, showing materials of construction, diameters, lengths and heights of suction and discharge lines.

© Lutz-Jesco GmbH 2020
Subject to technical changes.
201218

19 Index

A
Accessories 21
Approved media temperature 14

B
Back-pressure valve 22

C
Cemented connection 20
Clean suction and discharge valves 35
Commissioning the dosing pump 30
Connection sockets 25
Contact water meter 22
Control 27
Control elements 11
Conveying characteristics 12

D
Declaration of no objection 42
Decommissioning the dosing pump 33
Delivery capacity data 13
Delivery characteristic curves 40
Design of the system 18
Device revision 8
Diaphragms
- Replace 35
- Spare parts set 39

Dimensioned drawings 15
Dimensions 15
Disposal of old equipment 33
Dosing head
- Alignment 19
- Design 10
- Spare parts 39

Dosing head venting facility 21
Dosing media
- Approved media temperature 14
- Prohibited dosing media 8

E
Electrical installation 24
Electrical specifications 14
EU Declaration of Conformity 41
External On / Off via Release input 33
External operation 31

F
Foreseeable misuse 8
Function description 11

G
General warnings 5
Glue-in connection 20

H
Handling instructions
- Marking 4

Hazards due to non-compliance with the safety instructions 6
Hydraulic accessories 21
Hydraulic connections 19
Hydraulic installations 18

I
Injection nozzle 21
Inputs of the control unit 25
Installation 17
- electrical 24
- hydraulic 18

Installing the Dosing Pump 17
Intended purpose 8
Intended use 8
Internal operation 31

L
Leakage drain 21
Level input
- Connection 26

Level monitoring 22

M
Maintenance 34
Maintenance intervals 34

N
Notes for the Reader 4

O
Operating conditions and limits 13
Operating modes (MEMDOS SMART LD) 31
- Explanation of the icons 28
- External operation 31
- Internal operation 31

Operation 30
Operation with contact-type water meter 32
Operator controls of the control unit
- Operator controls of the control unit LB 27
- Operator controls of the control unit LD 27

P
Password protection 28
Personnel qualification 6
Pressure-relief valve 22
Priming aid 22
Product description 10
Product warranty 8
Prohibited dosing media 8
Pulsation dampener 22
Pulse input
- Connection 25

 © Lutz-Jesco GmbH 2020

R

Rating plate 11
Release input
Connection 25

S

Safety 5
Scope of delivery 10
Setting the transmission and reduction 32
Set up information 17
Shutdown 33
Shutting down in an emergency 33
Signal words
Explanation 4
Spare parts 39
Specialist staff 7
Start-up 30
Storage 33
Structure of the dosing pump 10
Suction pressure regulator 23
Suspensions 23
System piping 19

T

Technical data 13
Temperatures
Approved ambient temperature 13
Approved media temperature 14
Tighten up dosing head bolts 34
Trained persons 7
Transportation 33
Troubleshooting 36

V

Venting 30
Venting the dosing pump 30

W

Wall bracket 17
Wall mounting 17
Warnings
General warnings 5
Marking 4
Warning sign
Explanation 4
Warranty claim 43
Water meter 22
Working in a safety-conscious manner 6

© Lutz-Jesco GmbH 2020
Subject to technical changes.
201218

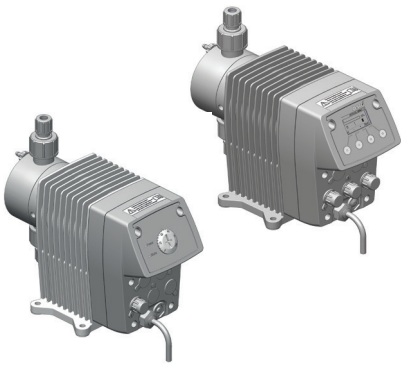

Lutz-Jesco GmbH

Am Bostelberge 19
D-30900 Wedemark

Phone: +49 5130 5802-0
info@lutz-jesco.com
www.lutz-jesco.com

Operating instructions
MEMDOS SMART LB/LD

Copyright 2020 by Lutz-Jesco GmbH